Cambridge Crossing
Hoskins Road
Simsbury, Connecticut

TRAFFIC IMPACT AND SITE ACCESS STUDY

Prepared for:

SUNLIGHT CONSTRUCTION

Prepared by:

Weston & Sampson Engineers, Inc.
WSE Project No. 2150302

August 2015

engineering, energy, planning, permitting, design, construction, operation, maintenance

Weston&Sampson®

273 Dividend Road
Rocky Hill, CT 06067

tel: 806-513-1473 fax: 860-513-1483
www.westonandsampson.com

TABLE OF CONTENTS

Page

EXECUTIVE SUMMARY i

1.0 INTRODUCTION 1

2.0 EXISTING CONDITIONS 3

2.1 Roadway Network 3

2.2 Study Intersections 3

2.3 Existing Traffic Volumes 4

2.4 Accident Experience 4

3.0 FUTURE NO BUILD CONDITIONS 6

4.0 PROPOSED DEVELOPMENT 9

4.1 Site Access 9

4.2 Trip Generation 9

4.3 Trip Distribution and Assignment 9

5.0 FUTURE BUILD CONDITIONS 12

6.0 OPERATIONAL ANALYSIS 14

7.0 CONCLUSIONS 17

APPENDIX A – Traffic Count Data

APPENDIX B – Accident Data

APPENDIX C – Other Development Projects

APPENDIX D – Speed Data

APPENDIX E – Explanation of Operational Analysis

APPENDIX F – Operational Analysis

LIST OF FIGURES

Figure 1 – Location Map 2

Figure 2 – Year 2015 Existing Traffic Volumes.....5

Figure 3 – Year 2018 No Build Traffic Volumes.....8

Figure 4 – Trip Distribution.....10

Figure 5 – Site Traffic Volumes.....11

Figure 6 – Year 2018 Build Traffic Volumes.....13

LIST OF TABLES

Table 1 – Historical Daily Traffic Volumes 6

Table 2 – Level of Service (Capacity) Summary 15

Table3 – Queue Summary, Feet.....16

EXECUTIVE SUMMARY

Sunlight Construction is proposing construction of Cambridge Crossing, a mixed residential development along Hoskins Road in Simsbury, Connecticut. On their behalf, Weston & Sampson has prepared a Traffic Impact and Site Access Study. The 28-acre development is proposed to be located along the northerly side of Hoskins Road, just west of the Ely Place apartments and opposite Old Barge Road. It will provide a total of 100 residential units; 52 single family homes, 24 patio homes, and 24 multifamily units (split amongst three buildings). Full build out of the project is anticipated in the year 2018.

Access to Cambridge Crossing is proposed to be located via one full access driveway along Hoskins Road midway between Old Barge Road to the west, and Ely Lane to the east. A second full access point, to be used for emergency access only, is proposed along Hoskins Road about 830-feet west of Old Barge Road. The site is located roughly 0.25 miles west of Route 10/202 (Hopmeadow Street).

It is projected that during a typical weekday, the residential development will generate 78 total trips (19 in/59 out) during the morning commuter peak hour, 113 total trips (72 in/41 out) during the evening commuter peak hour, and 884 daily trips (442 in/442 out).

This study reviewed the Year 2015 Existing, Year 2018 No Build, and Year 2018 Build conditions at the following intersections:

- Route 10/202 (Hopmeadow Street) at Hoskins Road
- Route 10/202 (Hopmeadow Street) at Ely Lane
- Ely Lane at Hoskins Road
- Hoskins Road at Site Driveway (Build only)
- Hoskins Road at Old Barge Road

The addition of anticipated site traffic volumes to the study intersections will result in minimal changes to the intersection operations. At each of the unsignalized study intersections, the LOS of critical approaches remains the same for No Build and Build conditions with negligible changes to approach capacity. The 95th percentile queues also remain essentially the same.

At the signalized intersection of Route 10/202 (Hopmeadow Street) at Hoskins Road, the overall intersection LOS remains the same with individual approach LOS at C or better. Minor timing modifications, will improve anticipated vehicle queueing along Route 10/202 (Hopmeadow Street) during both the AM and PM periods. Queueing can be improved to match or exceed No Build conditions for both study periods while balancing acceptable LOS and adequate capacity for intersection approaches. The northbound Route 10/202 (Hopmeadow Street) left turn movement, nearing capacity during the PM period, will also be improved.

The proposed site driveway is anticipated to operate at LOS B and C, during the weekday AM and PM peak hours, respectively. Queues are not expected to exceed one vehicle during either study period.

Based on the findings in this study, no adverse traffic impacts associated with the proposed Hoskins Road development are anticipated.

1.0 INTRODUCTION

Sunlight Construction has engaged Weston & Sampson to prepare a traffic impact and site access study for Cambridge Crossing, a proposed residential development in Simsbury, Connecticut. More specifically the 28-acre development is proposed to be located along the northerly side of Hoskins Road, just west of the Ely Place apartments and opposite of Old Barge Road as illustrated in Figure 1. It will provide a total of 100 residential units; 52 single family homes, 24 patio homes, and 24 multifamily units (split amongst three buildings). Full build out of the project is anticipated in the year 2018.

Access Cambridge Crossing is proposed to be located via one full access driveway to be located along Hoskins Road midway between Old Barge Road to the west, and Ely Lane to the east. A second full access point, to be used for emergency access only, is proposed along Hoskins Road about 830-feet west of Old Barge Road.

This study presents assessment of the impact, if any, of the anticipated site traffic volumes associated with the proposed residential development on the surrounding roadway network. The following conditions will be analyzed:

- Year 2015 Existing Conditions
- Year 2018 Future No Build Conditions
- Year 2018 Build Conditions

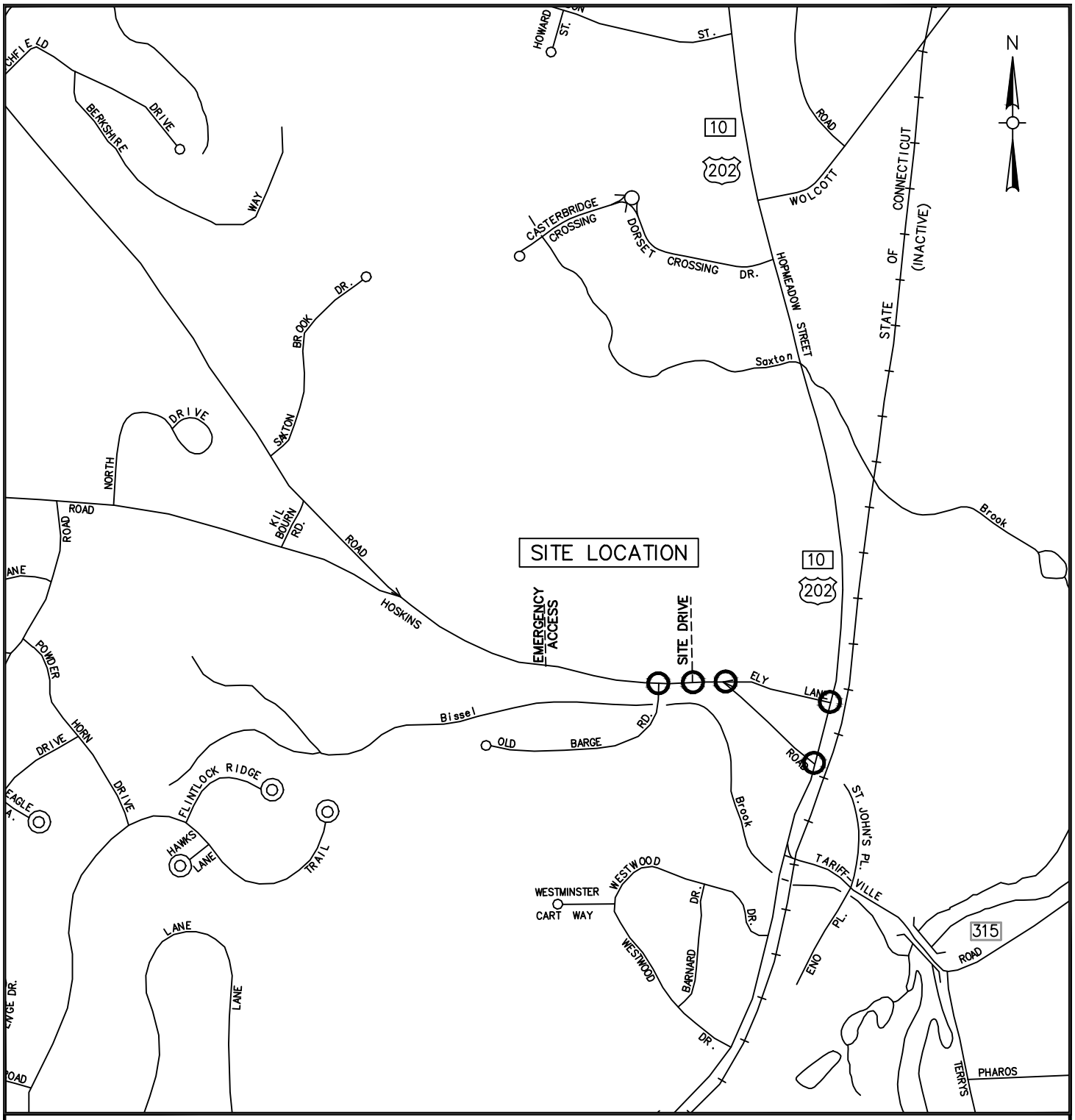

FIGURE 1

LOCATION MAP

HOSKINS ROAD DEVELOPMENT
SIMSBURY, CT

SCALE: 1" = 1000'

NOTE: MAP REFERENCED FROM CT DOT TRU MAP

Weston&Sampson

LEGEND:

STUDY INTERSECTION

2.0 EXISTING CONDITIONS

2.1 Roadway Network

The residential development is proposed to be located on Hoskins Road. **Hoskins Road** is essentially an east/west oriented, two-lane collector road which runs between Route 10/202 (Hopmeadow Street) east of the site to Firetown Road roughly 2-miles west of the site. Adjacent to the site the posted speed limit is 30 mph. Land use is primarily residential. The roadway has been recently repaved.

Other roadways in the study area include Ely Lane and Route 10/202 (Hopmeadow Street). **Ely Lane** is a short, two-lane, local roadway which runs between Hoskins Road and Route 10/202 (Hopmeadow Street). Land uses along Ely Lane are commercial and residential in nature.

Route 10/202 (Hopmeadow Street) is a north/south, two-lane arterial, which runs the length of Simsbury, from Avon to Granby. The posted speed limit within the study area is 35 miles per hour. Land uses are mostly commercial in nature with several small shopping centers, as well as, International Skating Center of Connecticut.

2.2 Study Intersections

This study looks at four existing intersections described below:

- **Route 10/202 (Hopmeadow Street) at Hoskins Road** is a three-legged, fully-actuated, signalized intersection. Route 10/202 (Hopmeadow Street) forms the northbound and southbound major street approaches and Hoskins Road the minor street eastbound approach. An exclusive left turn lane is provided on the northbound approach, and separate left and right turn lanes on the eastbound approach. During the weekday morning and evening peak periods the intersection operates time-based coordinated with the Route 10/202 (Hopmeadow Street) intersection with Route 315 (Tarrifville Road) to the south. A pedestrian crosswalk and push buttons are provided across the northerly leg of the intersection. When called, pedestrians will cross concurrently with the side street phase.

- **Route 10/202 (Hopmeadow Street) at Ely Lane** is a three-legged, unsignalized intersection. Route 10/202 (Hopmeadow Street) forms the northbound and southbound free-flow, major street approaches. Ely Lane forms the minor street eastbound approach and is STOP-sign controlled. A single lane is provided on each approach.

- **Ely Lane at Hoskins Road** is also a three-legged, unsignalized intersection. Hoskins Road forms the eastbound and westbound, major-street approaches. Ely Lane forms the minor street southwesterly approach. The Ely Lane and the Hoskins Road westbound approaches are STOP-sign controlled. A single lane is provided on each approach.

- **Hoskins Road at Old Barge Road,** a three-legged, unsignalized intersection, provides STOP-sign control on the northbound Old Barge Road side street approach. The eastbound and westbound Hoskins Road major street approaches are free-flow.

2.3 Existing Traffic Volumes

Intersection turning movement counts (TMCs) were performed at each of the study intersections. Specifically TMCs were conducted on Thursday June 9, 2015, while schools were in session, during the morning period between 7 AM and 9 AM and the evening period between 4 PM and 6 PM. The peak hour traffic volumes are illustrated in Figure 1 and traffic count data is provided in Appendix A.

2.4 Accident Experience

The most current three year period of accident data was requested of the CT DOT for Hoskins Road, Ely Lane, and Route 10/202 (Hopmeadow Street) within the study area. The data for the time period January 1, 2012 through December 31, 2014 is provided in Appendix B.

Based on a review of the accident experience there were few accidents along the local roads within the study area. Specifically, there were no accidents along Ely Lane between Hoskins Road and Route 10/202 and no accidents along Hoskins Road west Ely Lane within the study area. One accident was recorded at the intersection of Hoskins Road at Ely Lane. Three accidents were recorded along Hoskins Road between Ely Lane and Route 10/202 (Hopmeadow Street). Two of these accidents occurred on the same day during inclement weather, both were single vehicle accidents involving a fixed object. The third accident involved a vehicle turning left from a driveway onto Hoskins Road. All were non-injury accidents.

A total of 12 accidents (only 2 with injuries) were recorded along Route 10/202 (Hopmeadow Street) within the study area. One rear-end accident occurred along Ely Lane eastbound approach to its Route 10/202 (Hopmeadow Street) intersection. A second accident occurred along the state highway between Ely Lane and Hoskins Road and involved a vehicle turning left from a restaurant driveway. The remaining accidents were recorded at the Hoskins Road intersection with Route 10/202 (Hopmeadow Street). Most of the incidents occurred prior to the signalization of this intersection. Since the signalization in 2013, three accidents were recorded. All were non-injury incidents and were rear-end type collisions with two occurring on the Hoskins Road approach to the intersection and one southbound on the state highway.

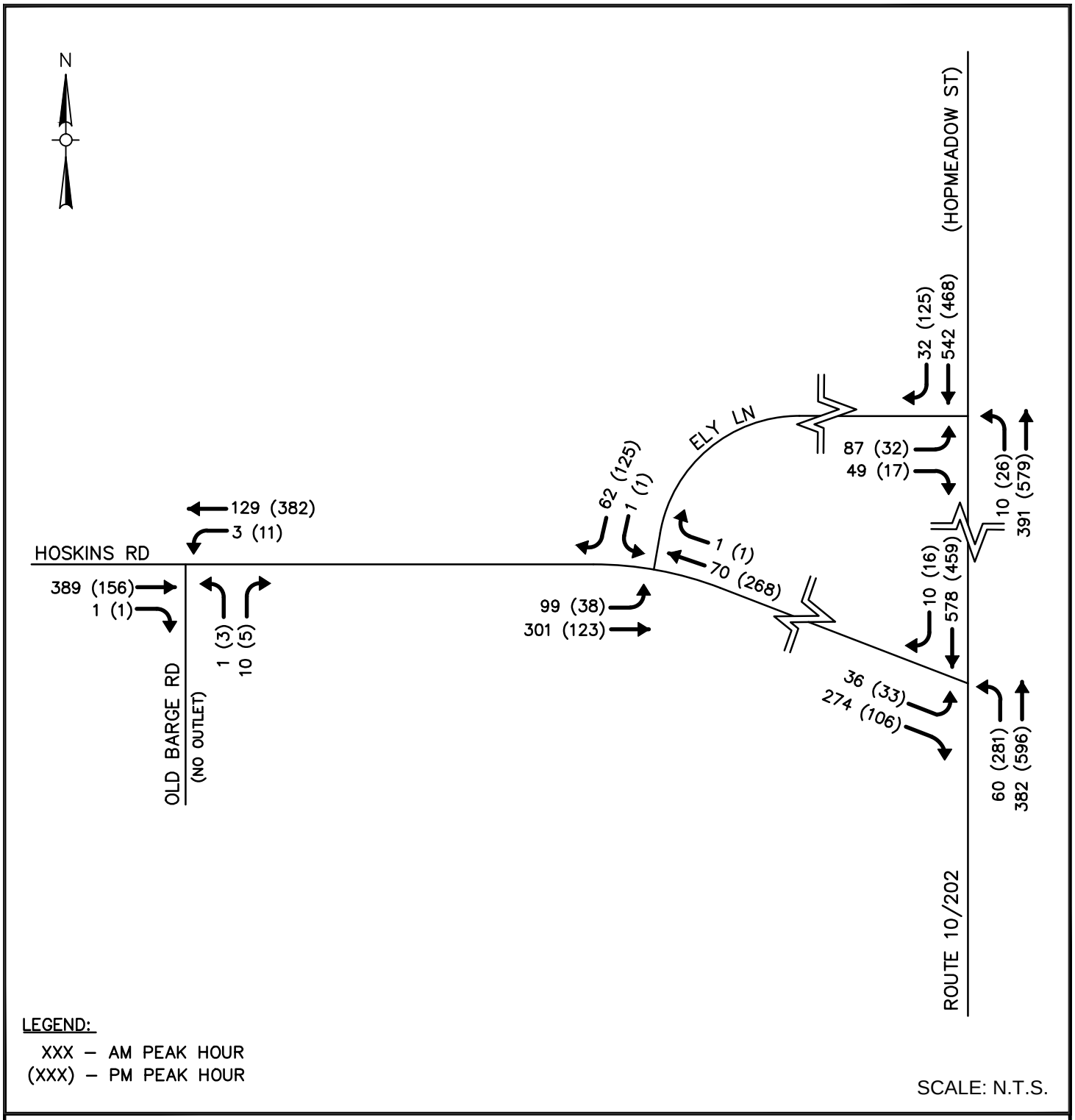

FIGURE 2

YEAR 2015 EXISTING
PEAK HOUR TRAFFIC VOLUMES

CAMBRIDGE CROSSING
SIMSBURY, CT

Weston&Sampson

3.0 FUTURE NO BUILD CONDITIONS

The future year 2018 “no build” traffic volumes were developed as a base of comparison for the proposed development traffic impact, if any. Year 2018 represents the anticipated year of full build out of the proposed development. Specifically, the existing year 2015 traffic volumes were increased by a background growth. Background traffic volume growth represents the increase of traffic volumes over the course of time. Growth occurs from developments within the immediate study vicinity, as well as ambient traffic growth due to development and population increase outside of the vicinity of the project site.

Ambient traffic growth is often developed from historical daily traffic volume data. Based on review of historical data available from the Connecticut Department of Transportation (CT DOT), and summarized in Table 1, traffic volumes along Route 10/202 immediately north and south of the study intersections have steadily decreased over time between the years 2004 and 2010. Between the years 2010 and 2013 traffic volumes have begun to increase, however, are still below volumes experienced more than ten years ago. Based on the increase of year 2013 volumes compared to 2010 volumes, a 2-percent per year growth rate was utilized to represent the ambient traffic growth within the study area. The background growth rate was applied to the 2015 existing traffic volumes and compounded for 3-years to represent year 2018 base traffic volumes.

Table 1. Historical Daily Traffic Volumes				
Location	Count Year			
	2004	2007	2010	2013
Route 10/202 north of Ely Lane	13,900	13,400	12,200	13,000
Route 10/202 south of Hoskins Road	15,700	16,200	14,100	14,200

In addition to the ambient traffic growth, site traffic volumes associated with other proposed/approved developments were included in the year 2018 “no build” traffic volumes. Based on information from the Town of Simsbury and the Office of State Traffic Administration (OSTA) the following developments have been proposed/approved and are either currently under construction or not yet built:

- Big Y World Class Supermarket
- Dorset Crossing
- Westminster School

The proposed **Big Y World Class Market** , to be located along the westerly side of Route 10/202 (Hopmeadow Street) between Ely Lane and the driveway to the International Skating Center of Connecticut, is the most current approved development within the study area. Based on information presented in a July 16, 2012 letter to the Town of Simsbury, from F.A. Hesketh and Associates, the supermarket is anticipated to generate 195 weekday AM peak hour and 652 PM peak hour trips. Copies of the site traffic volume figures from this letter are provided in Appendix C. These traffic volumes have been included in the Year 2018 No Build traffic volumes.

Dorset Crossing, although a bit north of the study area, will also increase volumes through the study intersections. Dorset Crossing is a mixed used development, currently under construction, which is proposed to include retail and office space, medical office, and residential units (a portion of which will be special needs apartments). Based on information presented in an April 11, 2012 letter to the The Keystone Companies, LLC, from F.A. Hesketh and Associates, and submitted to the Town of Simsbury, Dorset Crossing is anticipated to generate 446 weekday AM peak hour and 763 PM peak hour trips. The site traffic volumes associated with this development are provided in Appendix C. These traffic volumes have been included in the Year 2018 No Build traffic volumes.

Improvements to the **Westminster School** (a private boarding and day school) campus are also proposed. Improvements include mostly improved amenities and not anticipated to increase traffic volumes generated by the school

The Year 2018 No Build peak hour traffic volumes are summarized in Figure 3.

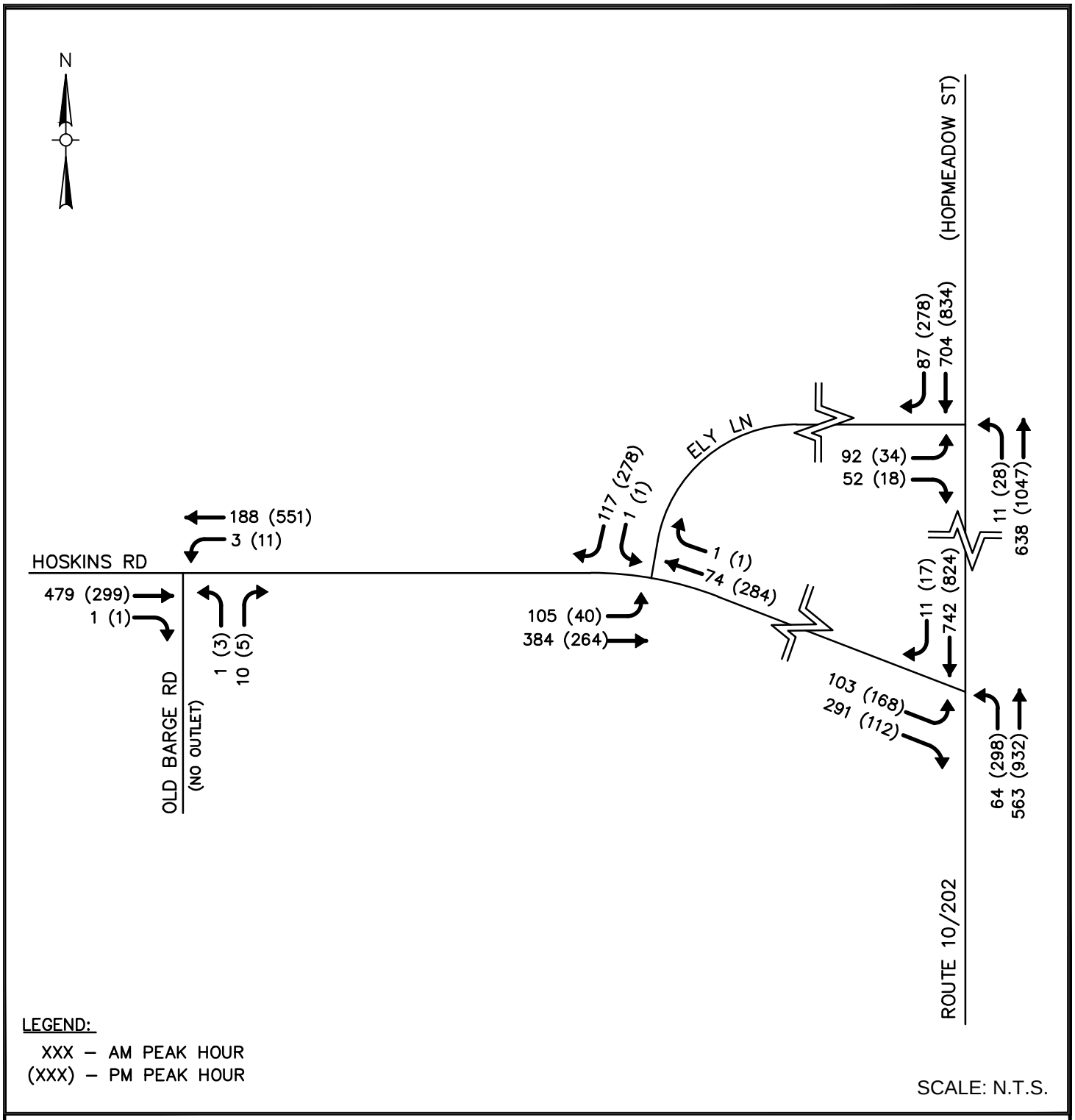

FIGURE 3

YEAR 2018 NO BUILD
PEAK HOUR TRAFFIC VOLUMES

CAMBRIDGE CROSSING
SIMSBURY, CT

Weston&Sampson

4.0 PROPOSED DEVELOPMENT

4.1 Site Access

Access to the residential development is proposed to be located via one full access driveway to be located along Hoskins Road midway between Old Barge Road to the west, and Ely Lane to the east. A second full access point, to be used for emergency access only, is proposed along Hoskins Road about 830-feet west of Old Barge Road.

The proposed access driveway was reviewed for Intersection Sight Distance (ISD). ISD is based on the design speed of a roadway. Design speed is typically based on the 85th percentile speed of a roadway. Speed data collected along Hoskins Road within the vicinity of the site indicates a combined eastbound and westbound 85th percentile speed of 41 miles per hour (MPH). The speed data is provided in Appendix D. Based on the CT DOT *Highway Design Manual*, 2003 Edition (Revised February 2013) an ISD of about 460-feet should be provided for a design speed of 41 mph. The proposed full access will provide a minimum of 460-feet of ISD.

4.2 Trip Generation

The proposed development will provide 52 single family homes, 24 patio homes, and 24 multifamily units (split amongst three buildings), totaling 100 residential units. The number of vehicle trips expected to be generated by the proposed development was estimated by applying the rates and equations developed by the Institute of Transportation Engineers (ITE) as published in *Trip Generation Manual,* 9th Edition. Specifically Land Use Code (LUC) 210, Single-Family Housing and LUC 220, Apartment were utilized.

It is projected that during a typical weekday, the residential development will generate 78 total trips (19 in/59 out) during the morning commuter peak hour, 113 total trips (72 in/41 out) during the evening commuter peak hour, and 884 (442 in/442 out) daily trips.

4.3 Trip Distribution and Assignment

The geographic distribution of the trips generated by the proposed development was determined based on the existing traffic patterns within the site vicinity. The trip distribution for the project is summarized in Figure 4. These distribution percentages were applied to the trips generated, and the traffic volumes were assigned to the road network. The peak hour turning movement volumes expected from the project are shown in Figure 5.

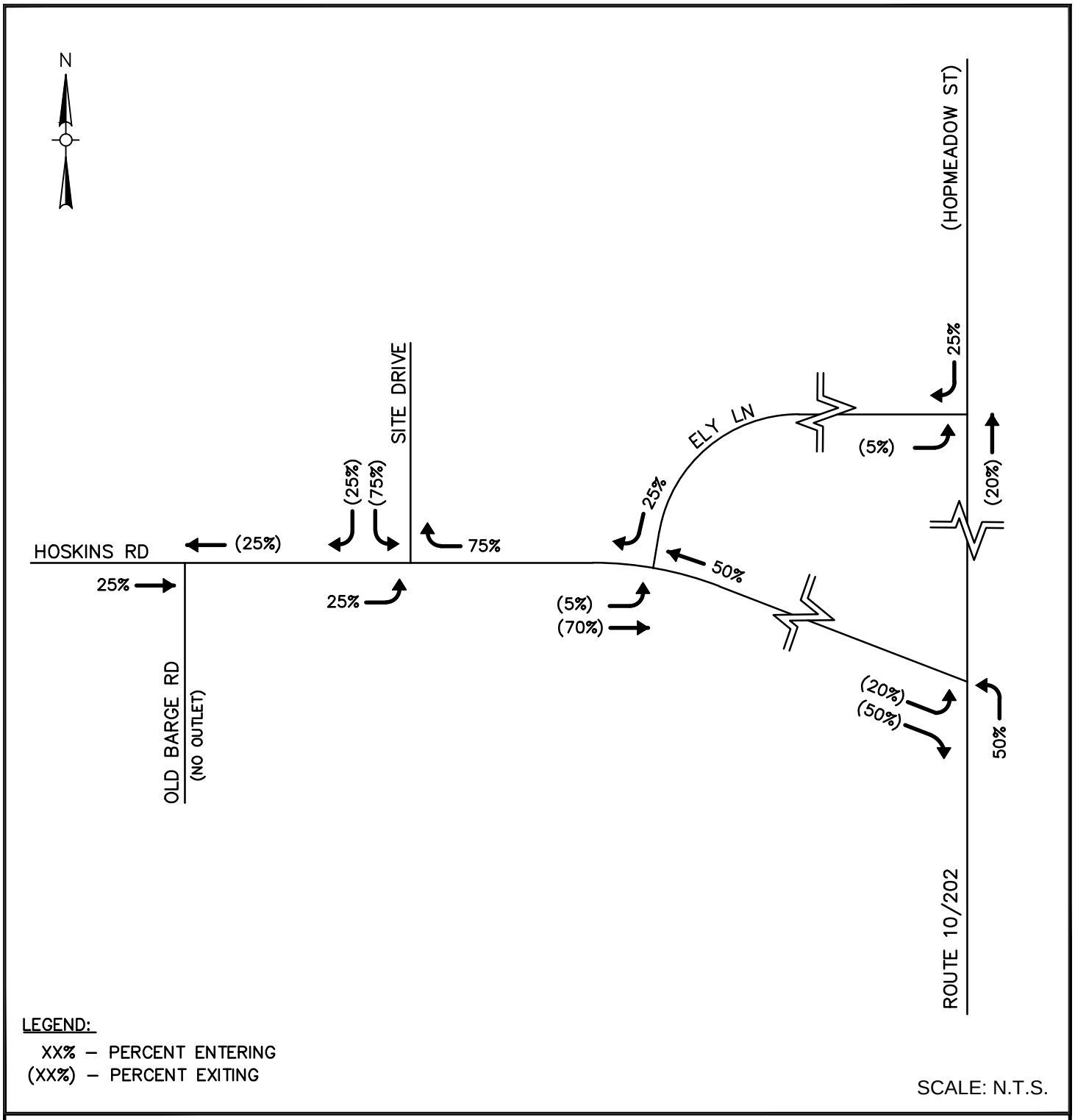

FIGURE 4

TRIP DISTRIBUTION

CAMBRIDGE CROSSING
SIMSBURY, CT

Weston&Sampson

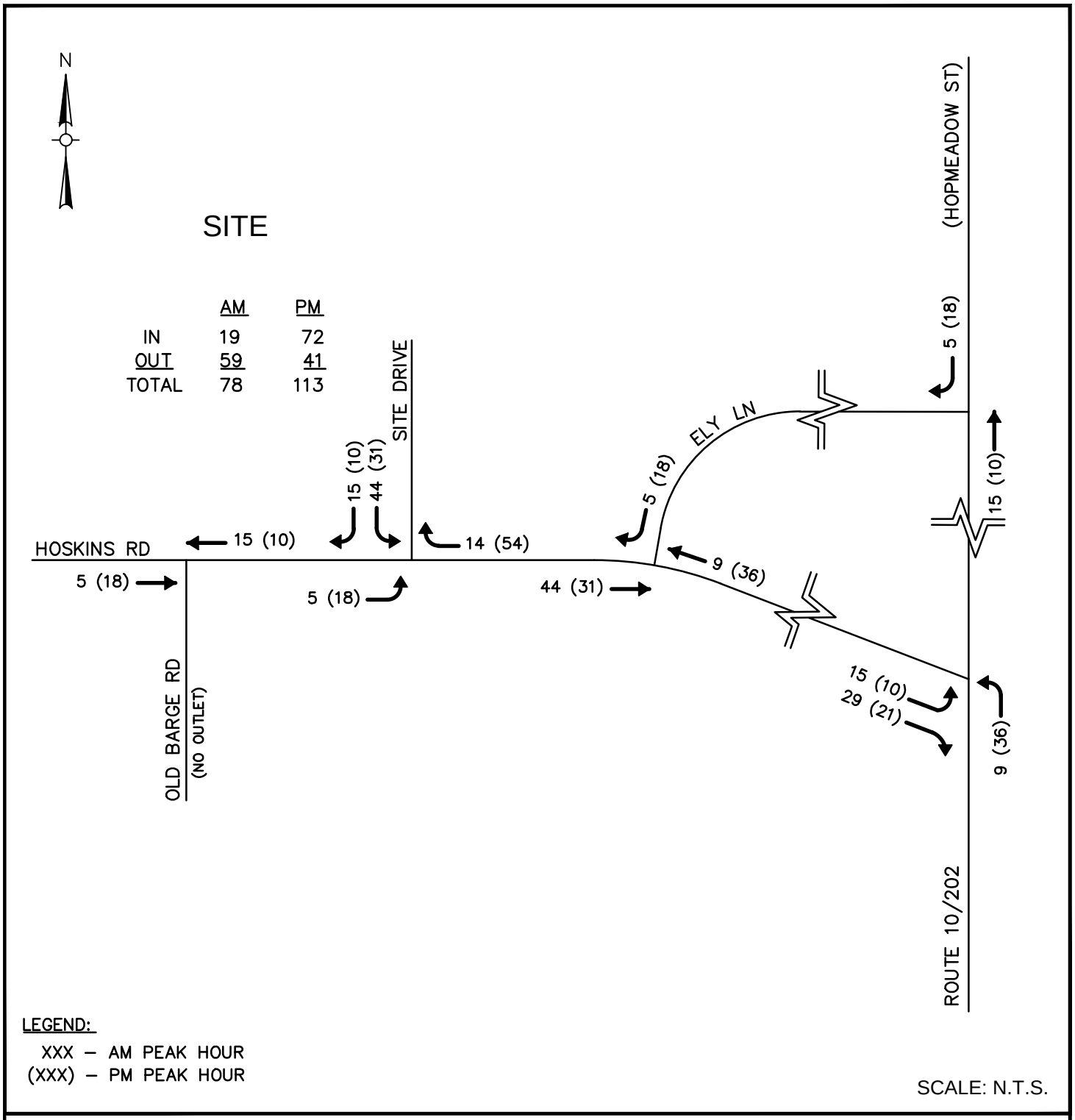

FIGURE 5

SITE TRAFFIC VOLUMES

CAMBRIDGE CROSSING
SIMSBURY, CT

Weston&Sampson

5.0 FUTURE BUILD CONDITIONS

The estimated Site Traffic vehicular trips for the proposed development were added to the Year 2018 No Build volumes to represent the traffic expected in the area with project build-out. The Year 2018 Build traffic volumes are shown in Figure 6.

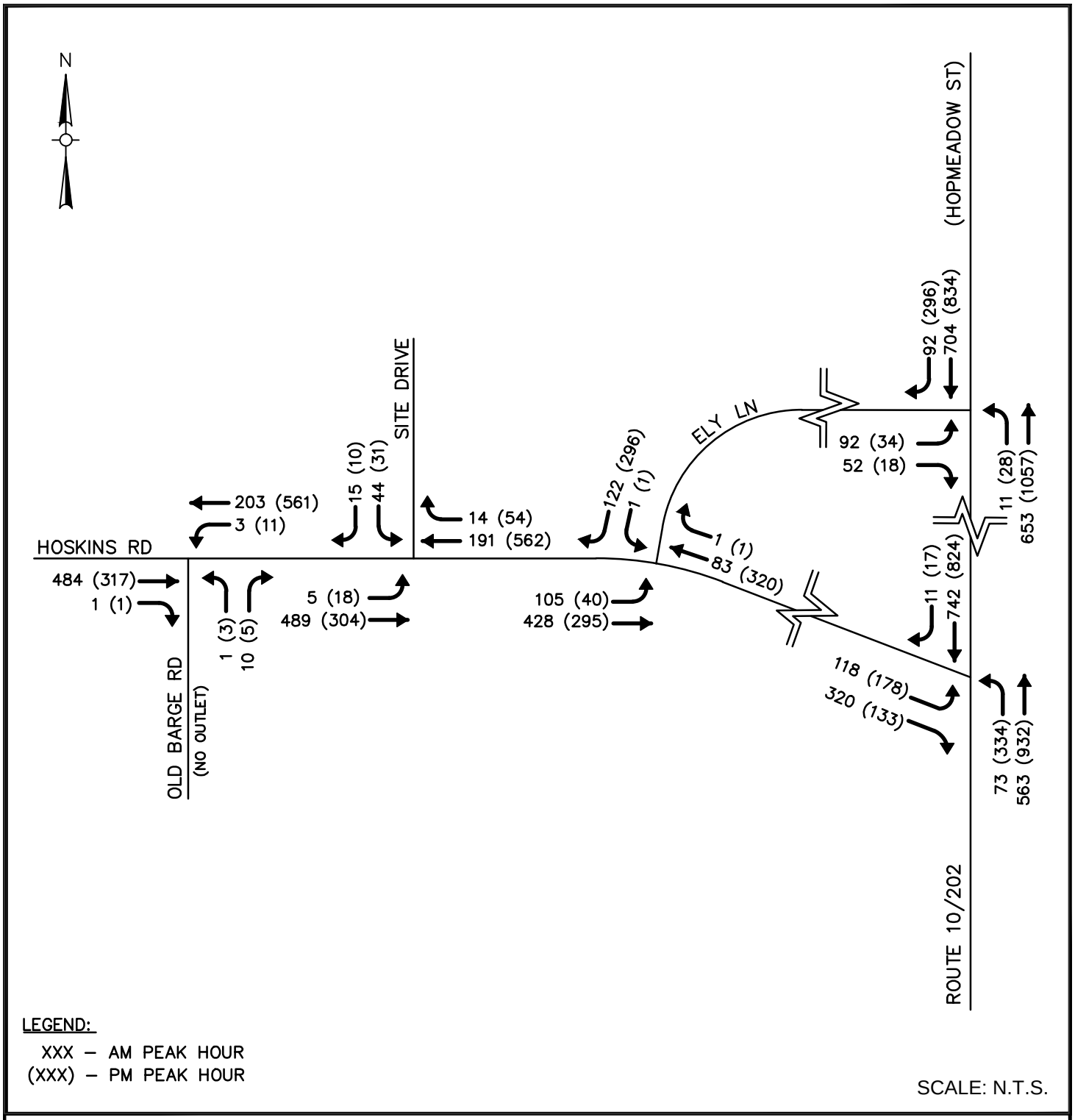

FIGURE 6

YEAR 2018 BUILD
PEAK HOUR TRAFFIC VOLUMES

CAMBRIDGE CROSSING
SIMSBURY, CT

Weston&Sampson

6.0 OPERATIONAL ANALYSIS

The study intersections were analyzed based on the Year 2015 Existing, Year 2018 No Build, and Year 2018 Build conditions. Using the methodologies described in Appendix E, EXPLANATION OF LEVEL OF SERVICE, the level of service (LOS), capacity (v/c ratio), and projected queues were determined for the study intersections and site driveway. The existing and anticipated LOS are summarized in Table 2 and 95th percentile queues in Table 3. The operational analysis is provided in Appendix F.

Comparing analysis results for Year 2018 No Build versus Year 2018 Build conditions, the addition of anticipated site traffic volumes to the study intersections will result in minimal changes to the intersection operations. At each of the unsignalized study intersections, the LOS of critical approaches remains the same for No Build and Build conditions with negligible changes to approach capacity. The 95th percentile queues also remain essentially the same.

At the signalized intersection of Route 10/202 (Hopmeadow Street) at Hoskins Road under Year 2018 Build Conditions, the overall intersection LOS remains the same with individual approach LOS at C or better. Timing modifications (Year 2018 Build with Improvements), however, were investigated at this intersection to improve vehicle queueing along Route 10/202 (Hopmeadow Street) during both the AM and PM periods, as well as, to improve capacity at the northbound Route 10/202 (Hopmeadow Street) left turn movement during the PM periods. As illustrated in Tables 2 and 3, with minor timing modifications, queueing can be improved to match or exceed No Build conditions for both study periods while balancing acceptable LOS, minor increases in delay, and adequate capacity. The northbound Route 10/202 (Hopmeadow Street) left turn movement during the PM period will also be improved.

Table 2 – Level of Service (Capacity) Summary								
Intersection	2015 Existing		2018 No Build		2018 Build		2018 Build w/ Improvements	
	AM	PM	AM	PM	AM	PM	AM	PM
Route 10/202 (Hopmeadow Road) at Hoskins Road:								
Route 10/202 NB: Left	A (0.10)	A (0.38)	B (0.16)	B (0.68)	B (0.20)	C (0.99)	B (0.21)	C (0.79)
Through	A (0.26)	A (0.38)	A (0.42)	A (0.67)	A (0.45)	A (0.67)	A (0.47)	A (0.67)
Route 10/202 SB: Through/Right	B (0.50)	A (0.42)	B (0.69)	B (0.71)	C (0.78)	B (0.74)	B (0.73)	B (0.73)
Hoskins Road EB: Left	C (0.22)	C (0.13)	C (0.51)	D (0.78)	C (0.54)	C (0.79)	C (0.37)	D (0.81)
Right	C (0.71)	C (0.28)	C (0.71)	C (0.36)	C (0.70)	C (0.39)	D (0.88)	C (0.40)
Overall Intersection	B	A	B	B	B	B	C	B
Route 10/202 (Hopmeadow Road) at Ely Lane[1]:								
Ely Lane EB: Left/Right	D (0.46)	C (0.21)	F (0.86)	F (0.88)	F (0.88)	F (0.90)	-	-
Hoskins Road at Ely Lane[1]:								
Hoskins Road WB: Through/Right	A (0.10)	A (0.36)	A (0.12)	B (0.44)	A (0.13)	B (0.51)	-	-
Ely Lane SB: Left/Right	A (0.07)	B (0.18)	A (0.14)	B (0.41)	A (0.14)	B (0.46)	-	-
Hoskins Road at Site Drive[1]:								
Site Drive SB: Left/Right	-	-	-	-	B (0.15)	C (0.15)	-	-
Hoskins Road at Old Barge Road[1]:								
Old Barge Road NB: Left/Right	B (0.02)	B (0.01)	B (0.02)	B (0.02)	B (0.02)	B (0.02)	-	-

[1] Unsignalized intersection, LOS and capacity for stop-controlled approaches only.

Table 3 – Queue Summary, Feet									
Intersection	Available Storage (feet)	2015 Existing		2018 No Build		2018 Build		2018 Build w/Improvements	
		AM	PM	AM	PM	AM	PM	AM	PM
Route 10/202 (Hopmeadow Road) at Hoskins Road:									
Route 10/202 NB: Left	150	25	50	25	275	25	350	25	200
Through	650	100	150	200	525	200	550	200	450
Route 10/202 SB: Through/Right	300+	300	200	575	750	650	750	550	650
Hoskins Road EB: Left	750+	50	50	125	150	125	175	125	175
Right	250	125	50	175	50	200	50	175	50
Route 10/202 (Hopmeadow Road) at Ely Lane[1]:									
Ely Lane EB: Left/Right	750	75	25	175	125	175	125	-	-
Hoskins Road at Ely Lane[1]:									
Hoskins Road WB: Through/Right	750	25	50	25	75	25	75	-	-
Ely Lane SB: Left/Right	750	25	25	25	50	25	75	-	-
Hoskins Road at Site Drive[1]:									
Site Drive SB: Left/Right	300+	-	-	-	-	25	25	-	-
Hoskins Road at Old Barge Road[1]:									
Old Barge Road NB: Left/Right	500+	25	0	25	25	25	25	-	-

[1] Unsignalized intersection, queue for stop-controlled approaches only.

7.0 CONCLUSIONS

In conclusion, based on the findings in this study, no adverse traffic impacts associated with the Cambridge Crossing project are anticipated.

Operational analyses were conducted for the following study intersections for the Year 2015 Existing, Year 2018 No Build, and Year 2018 Build conditions:

- Route 10/202 (Hopmeadow Street) at Hoskins Road
- Route 10/202 (Hopmeadow Street) at Ely Lane
- Ely Lane at Hoskins Road
- Hoskins Road at Site Driveway (Build only)
- Hoskins Road at Old Barge Road

The addition of anticipated site traffic volumes to the study intersections will result in minimal changes to the intersection operations. At each of the unsignalized study intersections, the LOS of critical approaches remains the same for No Build and Build conditions with negligible changes to approach capacity. The 95th percentile queues also remain essentially the same.

At the signalized intersection of Route 10/202 (Hopmeadow Street) at Hoskins Road given the 2018 Build Conditions, the overall intersection LOS remains the same as the 2018 No Build conditions. The LOS for individual approaches are anticipated at C or better, however, during the PM period the Route 10/202 (Hopmeadow Street) northbound left turn lane is projected to near capacity. The 95th percentile queues for the Route 10/202 (Hopmeadow Street) southbound approach lane and the Hoskins Road eastbound right turn lane during the AM period may increase by a few vehicles (no more than 3 vehicles), as well as the Route 10/202 (Hopmeadow Street) northbound approach lanes and the Hoskins Road eastbound left turn lane.

Should these queues be experienced in the future, minor timing modifications can improve queues to match or exceed No Build conditions for both study periods while balancing acceptable LOS and adequate capacity for intersection approaches. The northbound Route 10/202 (Hopmeadow Street) left turn movement, nearing capacity during the PM period, would also be improved.

The proposed site driveway is anticipated to operate at LOS B and C, during the weekday AM and PM peak hours, respectively. Queues are not expected to exceed one vehicle during either study period.

APPENDIX A:
Traffic Count Data

Connecticut Counts LLC

Kensington, Connecticut 06037
(860) 828-1693

Route 202/10 at Hoskins Road
Simsbury, Connecticut

File Name : 13379
Site Code : 13379
Start Date : 6/9/2015
Page No : 1

Groups Printed- Unshifted - Bank 1 - Bank 2

	Route 202/10 From North					From East					Route 202/10 From South					Hoskins Road From West					
Start Time	Right	Thru	Left	Peds	App. Total	Right	Thru	Left	Peds	App. Total	Right	Thru	Left	Peds	App. Total	Right	Thru	Left	Peds	App. Total	Int. Total
07:00 AM	2	118	0	0	120	0	0	0	0	0	0	76	9	0	85	89	0	2	0	91	296
07:15 AM	3	108	0	0	111	0	0	0	0	0	0	90	14	0	104	74	0	2	0	76	291
07:30 AM	0	137	0	0	137	0	0	0	0	0	0	102	10	0	112	88	0	7	0	95	344
07:45 AM	3	156	0	0	159	0	0	0	0	0	0	72	12	0	84	76	0	10	0	86	329
Total	8	519	0	0	527	0	0	0	0	0	0	340	45	0	385	327	0	21	0	348	1260
08:00 AM	3	139	0	0	142	0	0	0	0	0	0	81	13	0	94	58	0	8	0	66	302
08:15 AM	1	154	0	0	155	0	0	0	0	0	0	103	19	0	122	60	0	7	0	67	344
08:30 AM	3	129	0	0	132	0	0	0	0	0	0	126	16	0	142	80	0	11	0	91	365
08:45 AM	5	115	0	0	120	0	0	0	0	0	0	89	24	0	113	65	0	5	0	70	303
Total	12	537	0	0	549	0	0	0	0	0	0	399	72	0	471	263	0	31	0	294	1314
Grand Total	20	1056	0	0	1076	0	0	0	0	0	0	739	117	0	856	590	0	52	0	642	2574
Apprch %	1.9	98.1	0	0		0	0	0	0		0	86.3	13.7	0		91.9	0	8.1	0		
Total %	0.8	41	0	0	41.8	0	0	0	0	0	0	28.7	4.5	0	33.3	22.9	0	2	0	24.9	
Unshifted	20	1034																			
% Unshifted	100	97.9	0	0	98	0	0	0	0	0	0	98.1	94	0	97.5	98.8	0	96.2	0	98.6	98
Bank 1	0	16	0	0	16	0	0	0	0	0	0	11	3	0	14	0	0	1	0	1	31
% Bank 1	0	1.5	0	0	1.5	0	0	0	0	0	0	1.5	2.6	0	1.6	0	0	1.9	0	0.2	1.2
Bank 2	0	6	0	0	6	0	0	0	0	0	0	3	4	0	7	7	0	1	0	8	21
% Bank 2	0	0.6	0	0	0.6	0	0	0	0	0	0	0.4	3.4	0	0.8	1.2	0	1.9	0	1.2	0.8

Connecticut Counts LLC

Kensington, Connecticut 06037
(860) 828-1693

File Name : 13379
Site Code : 13379
Start Date : 6/9/2015
Page No : 2

	Route 202/10 From North					From East					Route 202/10 From South					Hoskins Road From West					
Start Time	Right	Thru	Left	Peds	App. Total	Right	Thru	Left	Peds	App. Total	Right	Thru	Left	Peds	App. Total	Right	Thru	Left	Peds	App. Total	Int. Total
Peak Hour Analysis From 07:00 AM to 08:45 AM - Peak 1 of 1																					
Peak Hour for Entire Intersection Begins at 07:45 AM																					
07:45 AM	**3**	**156**	0	0	**159**	0	0	0	0	0	0	72	12	0	84	76	0	10	0	86	329
08:00 AM	3	139	0	0	142	0	0	0	0	0	0	81	13	0	94	58	0	8	0	66	302
08:15 AM	1	154	0	0	155	0	0	0	0	0	0	103	**19**	0	122	60	0	7	0	67	344
08:30 AM	3	129	0	0	132	0	0	0	0	0	0	**126**	16	0	**142**	**80**	0	**11**	0	**91**	**365**
Total Volume	10	578	0	0	588	0	0	0	0	0	0	382	60	0	442	274	0	36	0	310	1340
% App. Total	1.7	98.3	0	0		0	0	0	0		0	86.4	13.6	0		88.4	0	11.6	0		
PHF	.833	.926	.000	.000	.925	.000	.000	.000	.000	.000	.000	.758	.789	.000	.778	.856	.000	.818	.000	.852	.918

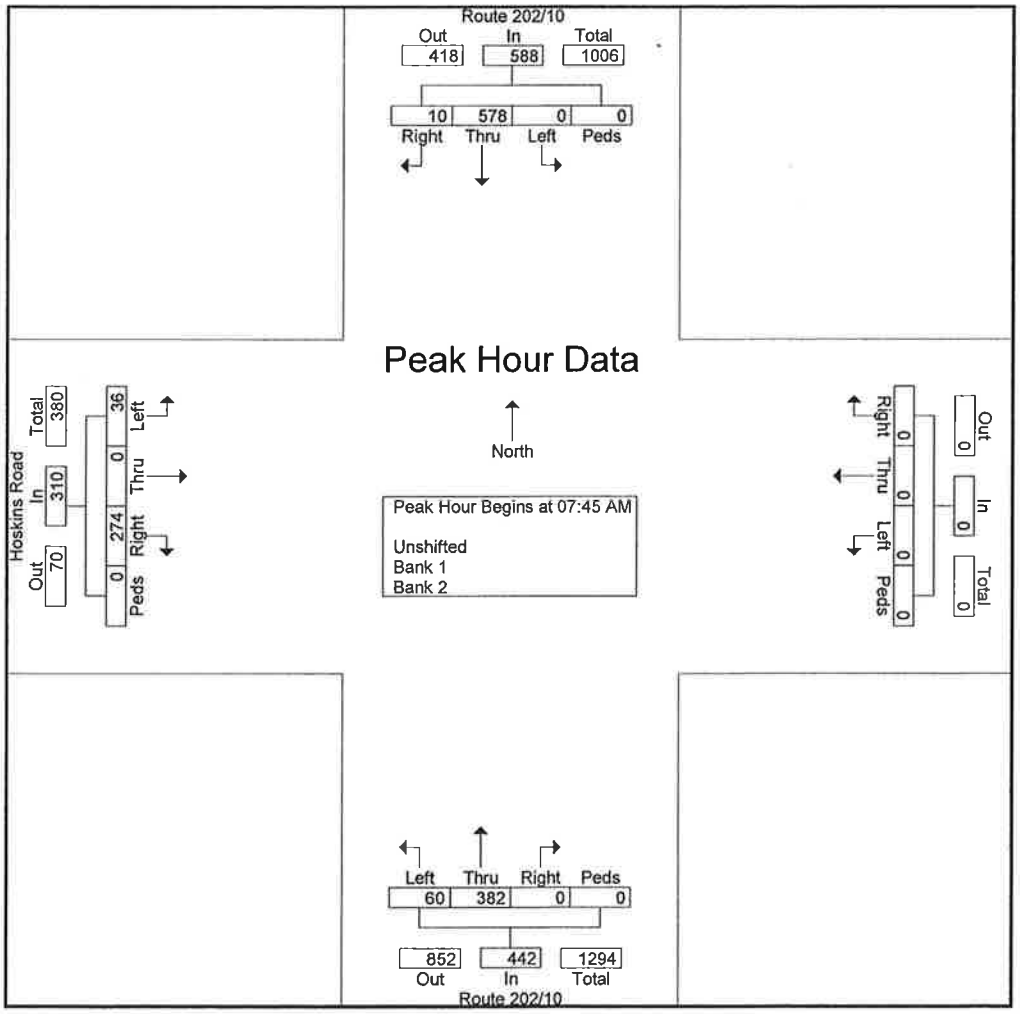

Connecticut Counts LLC

Kensington, Connecticut 06037
(860) 828-1693

Route 202/10 at Hoskins Road
Simsbury, Connecticut

File Name : 13380
Site Code : 13380
Start Date : 6/9/2015
Page No : 1

Groups Printed- Unshifted - Bank 1 - Bank 2

	Route 202/10 From North					From East					Route 202/10 From South					Hoskins Road From West					
Start Time	Right	Thru	Left	Peds	App. Total	Right	Thru	Left	Peds	App. Total	Right	Thru	Left	Peds	App. Total	Right	Thru	Left	Peds	App. Total	Int. Total
04:00 PM	3	100	0	0	103	0	0	0	0	0	0	144	40	0	184	23	0	10	0	33	320
04:15 PM	3	111	0	0	114	0	0	0	0	0	0	147	49	0	196	29	0	10	0	39	349
04:30 PM	5	117	0	0	122	0	0	0	0	0	0	153	50	0	203	22	0	9	0	31	356
04:45 PM	5	106	0	0	111	0	0	0	0	0	0	132	51	0	183	21	0	11	0	32	326
Total	16	434	0	0	450	0	0	0	0	0	0	576	190	0	766	95	0	40	0	135	1351
05:00 PM	5	114	0	0	119	0	0	0	0	0	0	143	64	0	207	28	0	10	0	38	364
05:15 PM	6	112	0	0	118	0	0	0	0	0	0	148	72	0	220	30	0	8	0	38	376
05:30 PM	4	110	0	0	114	0	0	0	0	0	0	168	73	0	241	17	0	4	0	21	376
05:45 PM	1	116	0	0	117	0	0	0	0	0	0	137	72	0	209	31	0	11	0	42	368
Total	16	452	0	0	468	0	0	0	0	0	0	596	281	0	877	106	0	33	0	139	1484
Grand Total	32	886	0	0	918	0	0	0	0	0	0	1172	471	0	1643	201	0	73	0	274	2835
Apprch %	3.5	96.5	0	0		0	0	0	0		0	71.3	28.7	0		73.4	0	26.6	0		
Total %	1.1	31.3	0	0	32.4	0	0	0	0	0	0	41.3	16.6	0	58	7.1	0	2.6	0	9.7	
Unshifted	31	873	0	0	904	0	0	0	0	0	0	1151									
% Unshifted	96.9	98.5	0	0	98.5	0	0	0	0	0	0	98.2	99.6	0	98.6	97	0	98.6	0	97.4	98.4
Bank 1	1	8	0	0	9	0	0	0	0	0	0	16	1	0	17	3	0	1	0	4	30
% Bank 1	3.1	0.9	0	0	1	0	0	0	0	0	0	1.4	0.2	0	1	1.5	0	1.4	0	1.5	1.1
Bank 2	0	5	0	0	5	0	0	0	0	0	0	5	1	0	6	3	0	0	0	3	14
% Bank 2	0	0.6	0	0	0.5	0	0	0	0	0	0	0.4	0.2	0	0.4	1.5	0	0	0	1.1	0.5

Connecticut Counts LLC

Kensington, Connecticut 06037
(860) 828-1693

File Name : 13380
Site Code : 13380
Start Date : 6/9/2015
Page No : 2

	Route 202/10 From North					From East					Route 202/10 From South					Hoskins Road From West					
Start Time	Right	Thru	Left	Peds	App. Total	Right	Thru	Left	Peds	App. Total	Right	Thru	Left	Peds	App. Total	Right	Thru	Left	Peds	App. Total	Int. Total
Peak Hour Analysis From 04:00 PM to 05:45 PM - Peak 1 of 1																					
Peak Hour for Entire Intersection Begins at 05:00 PM																					
05:00 PM	5	114	0	0	**119**	0	0	0	0	0	0	143	64	0	207	28	0	10	0	38	364
05:15 PM	**6**	112	0	0	118	0	0	0	0	0	0	148	72	0	220	30	0	8	0	38	**376**
05:30 PM	4	110	0	0	114	0	0	0	0	0	0	**168**	**73**	0	**241**	17	0	4	0	21	376
05:45 PM	1	**116**	0	0	117	0	0	0	0	0	0	137	72	0	209	**31**	0	**11**	0	**42**	368
Total Volume	16	452	0	0	468	0	0	0	0	0	0	596	281	0	877	106	0	33	0	139	1484
% App. Total	3.4	96.6	0	0		0	0	0	0		0	68	32	0		76.3	0	23.7	0		
PHF	.667	.974	.000	.000	.983	.000	.000	.000	.000	.000	.000	.887	.962	.000	.910	.855	.000	.750	.000	.827	.987

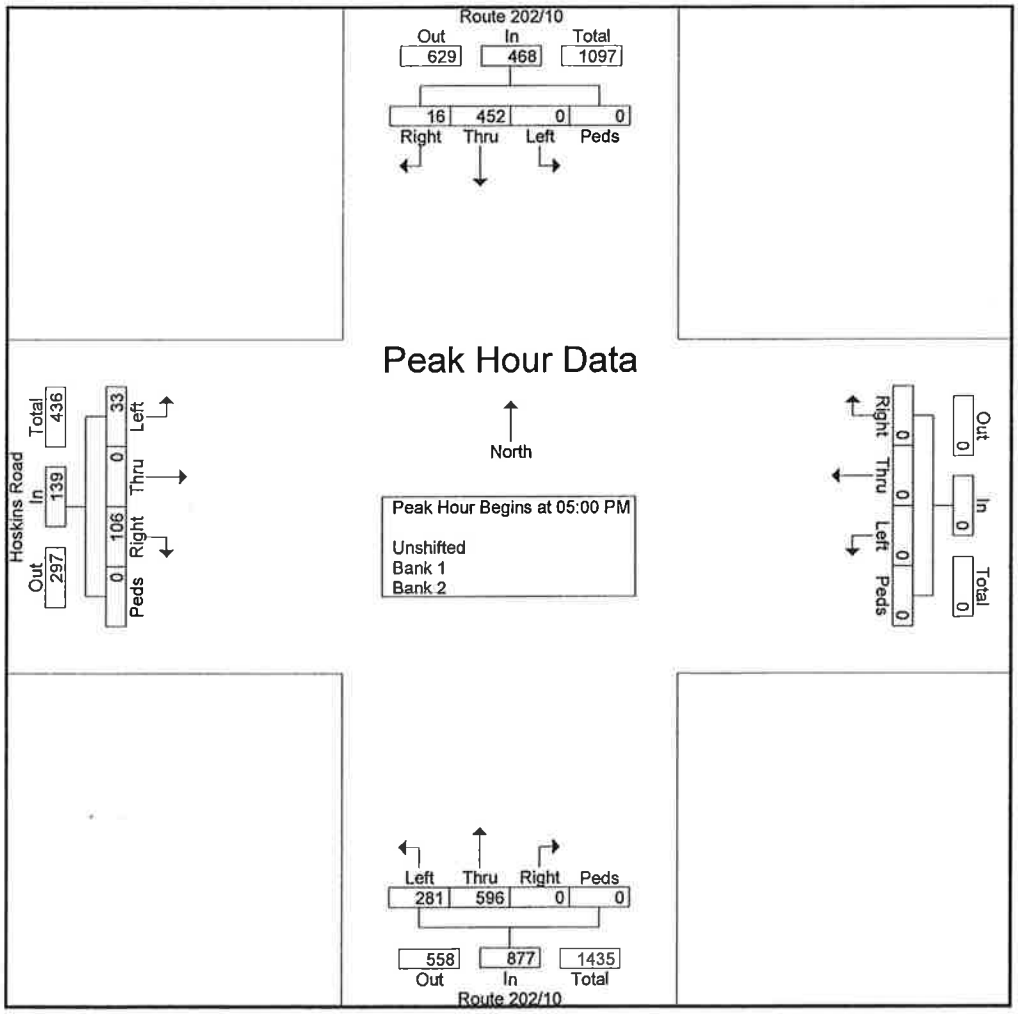

Connecticut Counts LLC

Kensington, Connecticut 06037

(860) 828-1693

Route 202/10 at Ely Lane (Unsignalized)
Simsbury, Connecticut

File Name : 13381
Site Code : 13381
Start Date : 6/9/2015
Page No : 1

Groups Printed- Unshifted - Bank 1 - Bank 2

	Route 202/10 From North					From East					Route 202/10 From South					Ely Lane From West					
Start Time	Right	Thru	Left	Peds	App. Total	Right	Thru	Left	Peds	App. Total	Right	Thru	Left	Peds	App. Total	Right	Thru	Left	Peds	App. Total	Int. Total
07:00 AM	4	113	0	0	117	0	0	0	0	0	0	69	4	0	73	17	0	19	0	36	226
07:15 AM	6	116	0	0	122	0	0	0	0	0	0	86	3	0	89	16	0	27	0	43	254
07:30 AM	11	132	0	0	143	0	0	0	0	0	0	103	3	0	106	12	0	31	0	43	292
07:45 AM	5	145	0	0	150	0	0	0	0	0	0	76	3	0	79	10	0	20	0	30	259
Total	26	506	0	0	532	0	0	0	0	0	0	334	13	0	347	55	0	97	0	152	1031
08:00 AM	9	145	0	0	154	0	0	0	0	0	0	98	3	1	102	12	0	15	0	27	283
08:15 AM	7	120	0	0	127	0	0	0	0	0	0	114	1	0	115	15	0	21	0	36	278
08:30 AM	5	111	0	0	116	0	0	0	0	0	0	71	6	0	77	8	0	22	0	30	223
08:45 AM	9	98	0	0	107	0	0	0	0	0	0	102	4	0	106	5	0	13	0	18	231
Total	30	474	0	0	504	0	0	0	0	0	0	385	14	1	400	40	0	71	0	111	1015
Grand Total	56	980	0	0	1036	0	0	0	0	0	0	719	27	1	747	95	0	168	0	263	2046
Apprch %	5.4	94.6	0	0		0	0	0	0		0	96.3	3.6	0.1		36.1	0	63.9	0		
Total %	2.7	47.9	0	0	50.6	0	0	0	0	0	0	35.1	1.3	0	36.5	4.6	0	8.2	0	12.9	
Unshifted	55	934	0	0	989	0	0	0	0	0	0	693	24	0	717	92	0	166	0	258	1964
% Unshifted																					
Bank 1	1	40	0	0	41	0	0	0	0	0	0	22	1	0	23	2	0	2	0	4	68
% Bank 1	1.8	4.1	0	0	4	0	0	0	0	0	0	3.1	3.7	0	3.1	2.1	0	1.2	0	1.5	3.3
Bank 2	0	6	0	0	6	0	0	0	0	0	0	4	2	1	7	1	0	0	0	1	14
% Bank 2	0	0.6	0	0	0.6	0	0	0	0	0	0	0.6	7.4	100	0.9	1.1	0	0	0	0.4	0.7

Connecticut Counts LLC

Kensington, Connecticut 06037
(860) 828-1693

File Name : 13381
Site Code : 13381
Start Date : 6/9/2015
Page No : 2

	Route 202/10 From North					From East					Route 202/10 From South					Ely Lane From West					
Start Time	Right	Thru	Left	Peds	App. Total	Right	Thru	Left	Peds	App. Total	Right	Thru	Left	Peds	App. Total	Right	Thru	Left	Peds	App. Total	Int. Total
Peak Hour Analysis From 07:00 AM to 08:45 AM - Peak 1 of 1																					
Peak Hour for Entire Intersection Begins at 07:30 AM																					
07:30 AM	**11**	132	0	0	143	0	0	0	0	0	0	103	**3**	0	106	12	0	**31**	0	**43**	**292**
07:45 AM	5	**145**	0	0	150	0	0	0	0	0	0	76	3	0	79	10	0	20	0	30	259
08:00 AM	9	145	0	0	**154**	0	0	0	0	0	0	98	3	**1**	102	12	0	15	0	27	283
08:15 AM	7	120	0	0	127	0	0	0	0	0	0	**114**	1	0	**115**	**15**	0	21	0	36	278
Total Volume	32	542	0	0	574	0	0	0	0	0	0	391	10	1	402	49	0	87	0	136	1112
% App. Total	5.6	94.4	0	0		0	0	0	0		0	97.3	2.5	0.2		36	0	64	0		
PHF	.727	.934	.000	.000	.932	.000	.000	.000	.000	.000	.000	.857	.833	.250	.874	.817	.000	.702	.000	.791	.952

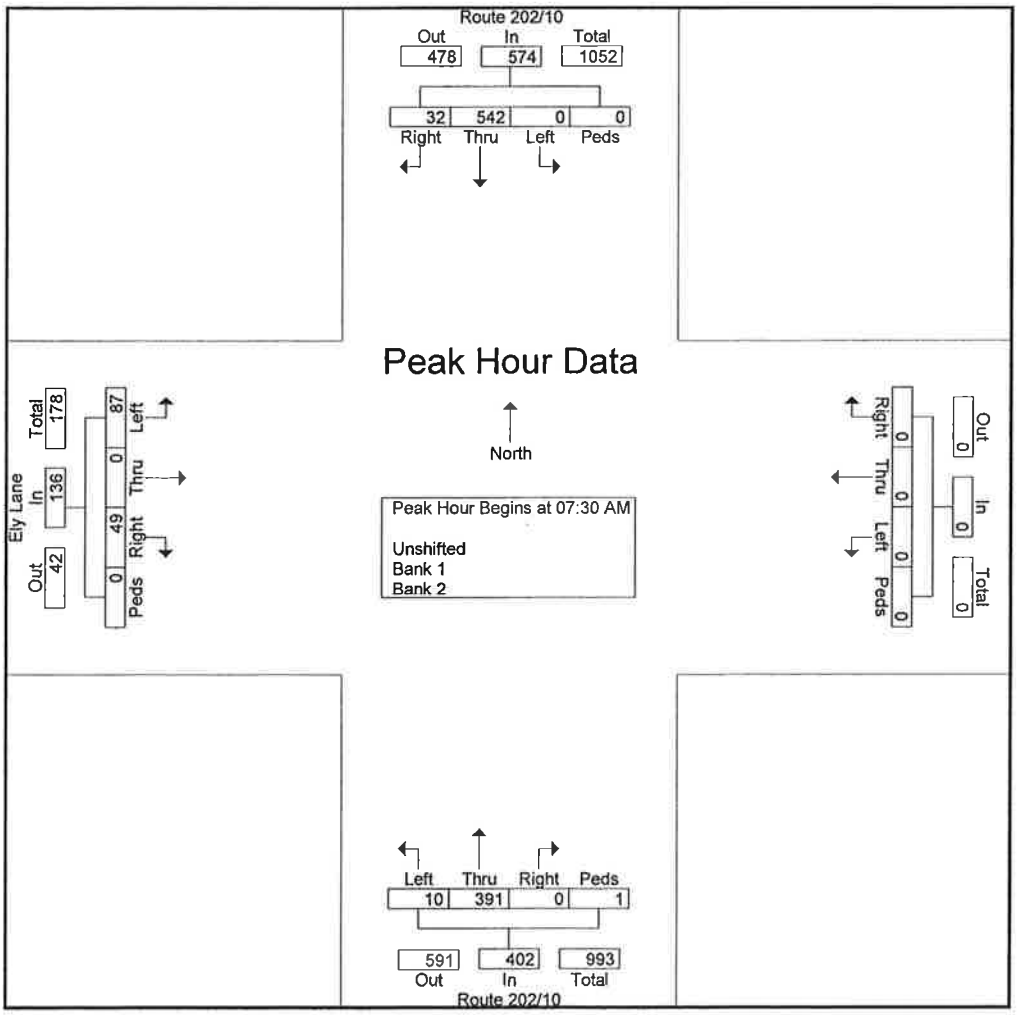

Connecticut Counts LLC

Kensington, Connecticut 06037

(860) 828-1693

Route 202/10 at Ely Lane (Unsignalized)
Simsbury, Connecticut

File Name : 13382
Site Code : 13382
Start Date : 6/9/2015
Page No : 1

Groups Printed- Unshifted - Bank 1 - Bank 2

	Route 202/10 From North					From East					Route 202/10 From South					Ely Lane From West					
Start Time	Right	Thru	Left	Peds	App. Total	Right	Thru	Left	Peds	App. Total	Right	Thru	Left	Peds	App. Total	Right	Thru	Left	Peds	App. Total	Int. Total
04:00 PM	15	91	0	0	106	0	0	0	0	0	0	153	6	0	159	5	0	11	0	16	281
04:15 PM	12	128	0	0	140	0	0	0	0	0	0	134	6	0	140	1	0	10	0	11	291
04:30 PM	35	113	0	0	148	0	0	0	0	0	0	158	5	0	163	6	0	9	0	15	326
04:45 PM	32	127	0	0	159	0	0	0	0	0	1	136	5	0	142	5	0	6	0	11	312
Total	94	459	0	0	553	0	0	0	0	0	1	581	22	0	604	17	0	36	0	53	1210
05:00 PM	31	116	0	0	147	0	0	0	0	0	0	145	10	0	155	3	0	8	0	11	313
05:15 PM	27	112	0	0	139	0	0	0	0	0	0	140	6	0	146	3	0	9	0	12	297
05:30 PM	27	106	0	0	133	0	0	0	0	0	0	148	7	0	155	1	0	11	0	12	300
05:45 PM	19	121	0	0	140	0	0	0	0	0	0	128	6	0	134	5	0	10	0	15	289
Total	104	455	0	0	559	0	0	0	0	0	0	561	29	0	590	12	0	38	0	50	1199
Grand Total	198	914	0	0	1112	0	0	0	0	0	1	1142	51	0	1194	29	0	74	0	103	2409
Apprch %	17.8	82.2	0	0		0	0	0	0		0.1	95.6	4.3	0		28.2	0	71.8	0		
Total %	8.2	37.9	0	0	46.2	0	0	0	0	0	0	47.4	2.1	0	49.6	1.2	0	3.1	0	4.3	
Unshifted	196	902	0	0	1098	0	0	0	0	0	0	1121									
% Unshifted	99	98.7	0	0	98.7	0	0	0	0	0	0	98.2	100	0	98.2	96.6	0	95.9	0	96.1	98.3
Bank 1	2	7	0	0	9	0	0	0	0	0	1	15	0	0	16	1	0	3	0	4	29
% Bank 1	1	0.8	0	0	0.8	0	0	0	0	0	100	1.3	0	0	1.3	3.4	0	4.1	0	3.9	1.2
Bank 2	0	5	0	0	5	0	0	0	0	0	0	6	0	0	6	0	0	0	0	0	11
% Bank 2	0	0.5	0	0	0.4	0	0	0	0	0	0	0.5	0	0	0.5	0	0	0	0	0	0.5

Connecticut Counts LLC

Kensington, Connecticut 06037
(860) 828-1693

File Name : 13382
Site Code : 13382
Start Date : 6/9/2015
Page No : 2

	Route 202/10 From North					From East					Route 202/10 From South					Ely Lane From West					
Start Time	Right	Thru	Left	Peds	App. Total	Right	Thru	Left	Peds	App. Total	Right	Thru	Left	Peds	App. Total	Right	Thru	Left	Peds	App. Total	Int. Total
Peak Hour Analysis From 04:00 PM to 05:45 PM - Peak 1 of 1																					
Peak Hour for Entire Intersection Begins at 04:30 PM																					
04:30 PM	**35**	113	0	0	148	0	0	0	0	0	0	**158**	5	0	**163**	**6**	0	**9**	0	**15**	**326**
04:45 PM	32	**127**	0	0	**159**	0	0	0	0	0	**1**	136	5	0	142	5	0	6	0	11	312
05:00 PM	31	116	0	0	147	0	0	0	0	0	0	145	**10**	0	155	3	0	8	0	11	313
05:15 PM	27	112	0	0	139	0	0	0	0	0	0	140	6	0	146	3	0	9	0	12	297
Total Volume	125	468	0	0	593	0	0	0	0	0	1	579	26	0	606	17	0	32	0	49	1248
% App. Total	21.1	78.9	0	0		0	0	0	0		0.2	95.5	4.3	0		34.7	0	65.3	0		
PHF	.893	.921	.000	.000	.932	.000	.000	.000	.000	.000	.250	.916	.650	.000	.929	.708	.000	.889	.000	.817	.957

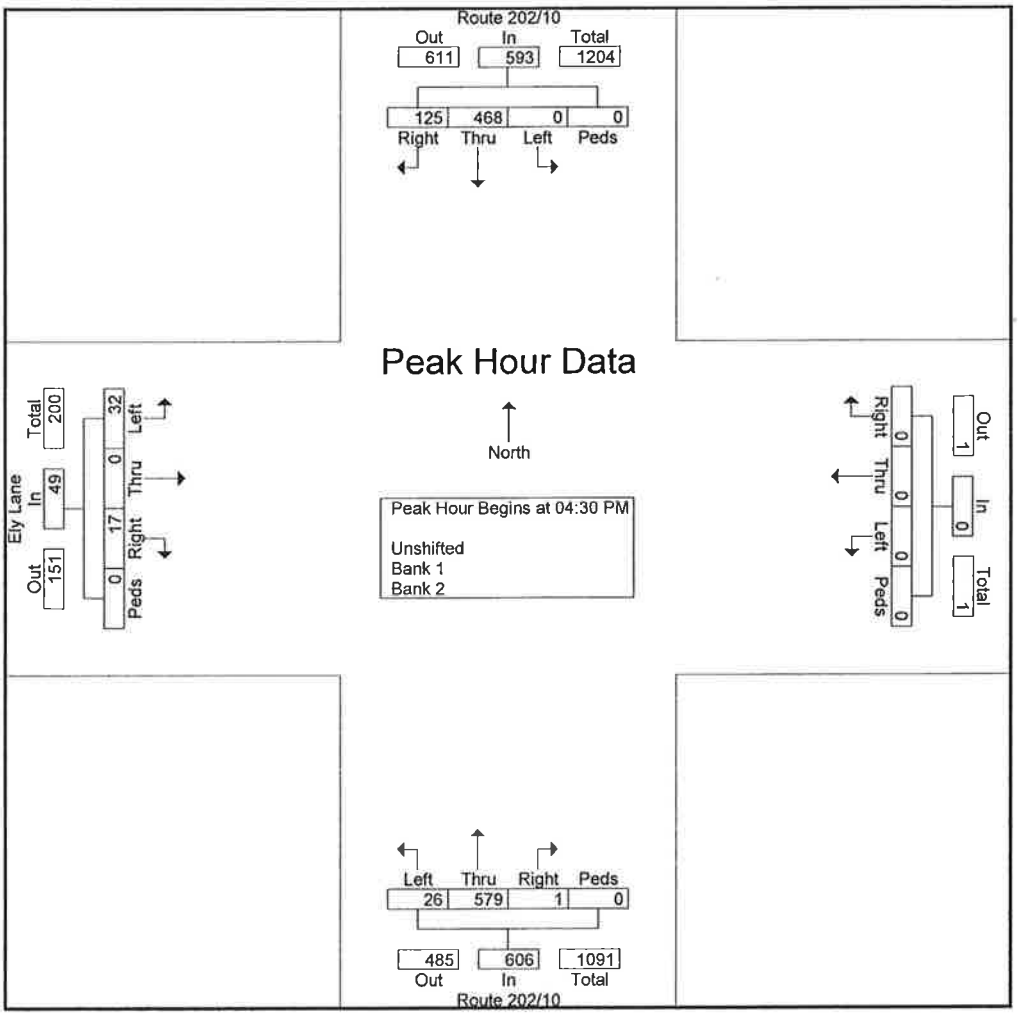

Connecticut Counts LLC

Kensington, Connecticut 06037
(860) 828-1693

Hoskins Road at Ely Lane
Simsbury, Connecticut

File Name : 13377
Site Code : 13377
Start Date : 6/9/2015
Page No : 1

Groups Printed- Unshifted - Bank 1 - Bank 2

	Ely Lane From North					Hoskins Road From East					From South					Hoskins Road From West					
Start Time	Right	Thru	Left	Peds	App. Total	Right	Thru	Left	Peds	App. Total	Right	Thru	Left	Peds	App. Total	Right	Thru	Left	Peds	App. Total	Int. Total
07:00 AM	7	0	0	0	7	0	9	0	0	9	0	0	0	0	0	0	77	21	0	98	114
07:15 AM	11	0	0	0	11	0	17	0	0	17	0	0	0	0	0	0	69	30	0	99	127
07:30 AM	18	0	1	0	19	0	14	0	0	14	0	0	0	0	0	0	93	25	0	118	151
07:45 AM	11	0	0	0	11	0	16	2	0	18	0	0	0	0	0	0	79	24	0	103	132
Total	47	0	1	0	48	0	56	2	0	58	0	0	0	0	0	0	318	100	0	418	524
08:00 AM	21	0	0	0	21	1	21	0	0	22	0	0	0	0	0	0	60	20	0	80	123
08:15 AM	17	0	0	0	17	0	18	0	0	18	0	0	0	0	0	0	68	16	0	84	119
08:30 AM	9	0	0	0	9	2	15	0	0	17	1	0	0	0	1	0	71	16	0	87	114
08:45 AM	8	0	1	0	9	1	20	1	0	22	0	0	0	0	0	0	43	15	0	58	89
Total	55	0	1	0	56	4	74	1	0	79	1	0	0	0	1	0	242	67	0	309	445
Grand Total	102	0	2	0	104	4	130	3	0	137	1	0	0	0	1	0	560	167	0	727	969
Apprch %	98.1	0	1.9	0		2.9	94.9	2.2	0		100	0	0	0		0	77	23	0		
Total %	10.5	0	0.2	0	10.7	0.4	13.4	0.3	0	14.1	0.1	0	0	0	0.1	0	57.8	17.2	0	75	
Unshifted	98	0	2	0	100	3	123	3	0	129	1	0	0	0	1	0	550	167	0	717	947
% Unshifted																					
Bank 1	2	0	0	0	2	1	3	0	0	4	0	0	0	0	0	0	2	0	0	2	8
% Bank 1	2	0	0	0	1.9	25	2.3	0	0	2.9	0	0	0	0	0	0	0.4	0	0	0.3	0.8
Bank 2	2	0	0	0	2	0	4	0	0	4	0	0	0	0	0	0	8	0	0	8	14
% Bank 2	2	0	0	0	1.9	0	3.1	0	0	2.9	0	0	0	0	0	0	1.4	0	0	1.1	1.4

Connecticut Counts LLC

Kensington, Connecticut 06037
(860) 828-1693

File Name : 13377
Site Code : 13377
Start Date : 6/9/2015
Page No : 2

	Ely Lane From North					Hoskins Road From East					From South					Hoskins Road From West					
Start Time	Right	Thru	Left	Peds	App. Total	Right	Thru	Left	Peds	App. Total	Right	Thru	Left	Peds	App. Total	Right	Thru	Left	Peds	App. Total	Int. Total
Peak Hour Analysis From 07:00 AM to 08:45 AM - Peak 1 of 1																					
Peak Hour for Entire Intersection Begins at 07:15 AM																					
07:15 AM	11	0	0	0	11	0	17	0	0	17	0	0	0	0	0	0	69	**30**	0	99	127
07:30 AM	18	0	**1**	0	19	0	14	0	0	14	0	0	0	0	0	0	**93**	25	0	**118**	**151**
07:45 AM	11	0	0	0	11	0	16	**2**	0	18	0	0	0	0	0	0	79	24	0	103	132
08:00 AM	**21**	0	0	0	**21**	**1**	**21**	0	0	**22**	0	0	0	0	0	0	60	20	0	80	123
Total Volume	61	0	1	0	62	1	68	2	0	71	0	0	0	0	0	0	301	99	0	400	533
% App. Total	98.4	0	1.6	0		1.4	95.8	2.8	0		0	0	0	0		0	75.2	24.8	0		
PHF	.726	.000	.250	.000	.738	.250	.810	.250	.000	.807	.000	.000	.000	.000	.000	.000	.809	.825	.000	.847	.882

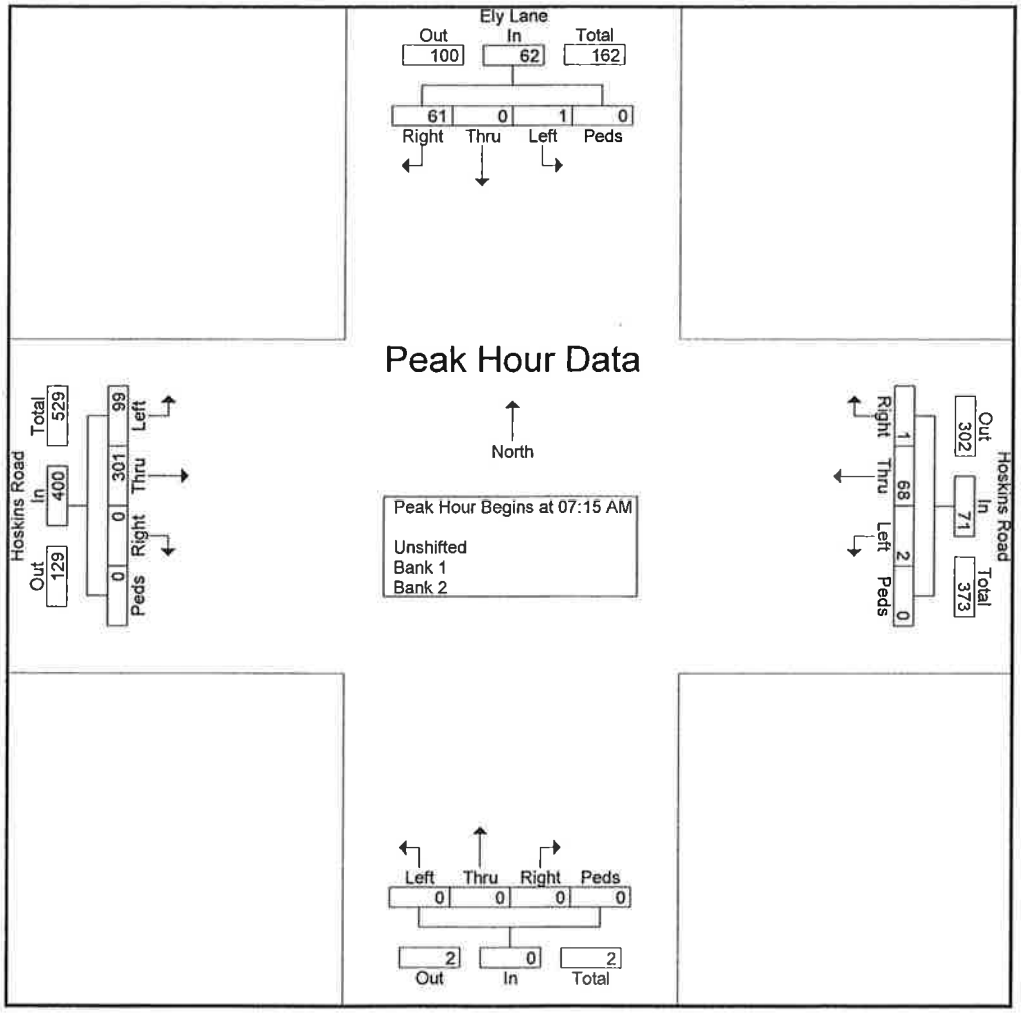

Connecticut Counts LLC

Kensington, Connecticut 06037
(860) 828-1693

Hoskins Road at Ely Lane
Simsbury, Connecticut

File Name : 13378
Site Code : 13378
Start Date : 6/9/2015
Page No : 1

Groups Printed- Unshifted - Bank 1 - Bank 2

	Ely Lane From North					Hoskins Road From East					From South					Hoskins Road From West					
Start Time	Right	Thru	Left	Peds	App. Total	Right	Thru	Left	Peds	App. Total	Right	Thru	Left	Peds	App. Total	Right	Thru	Left	Peds	App. Total	Int. Total
04:00 PM	30	0	1	0	31	0	37	0	0	37	0	0	0	0	0	0	29	9	0	38	106
04:15 PM	15	0	0	0	15	0	53	0	0	53	0	0	0	0	0	0	38	8	0	46	114
04:30 PM	39	0	0	0	39	2	45	0	0	47	0	0	0	0	0	0	28	5	0	33	119
04:45 PM	35	0	0	0	35	0	59	0	0	59	0	0	0	0	0	0	28	7	0	35	129
Total	119	0	1	0	120	2	194	0	0	196	0	0	0	0	0	0	123	29	0	152	468
05:00 PM	29	0	1	0	30	0	58	0	0	58	0	0	0	0	0	0	32	9	0	41	129
05:15 PM	29	0	0	0	29	1	65	0	0	66	0	0	0	0	0	0	30	9	0	39	134
05:30 PM	40	0	0	0	40	0	73	0	0	73	0	0	0	0	0	0	23	11	0	34	147
05:45 PM	24	0	0	0	24	0	65	0	0	65	0	0	0	0	0	0	38	9	0	47	136
Total	122	0	1	0	123	1	261	0	0	262	0	0	0	0	0	0	123	38	0	161	546
Grand Total	241	0	2	0	243	3	455	0	0	458	0	0	0	0	0	0	246	67	0	313	1014
Apprch %	99.2	0	0.8	0		0.7	99.3	0	0		0	0	0	0		0	78.6	21.4	0		
Total %	23.8	0	0.2	0	24	0.3	44.9	0	0	45.2	0	0	0	0	0	0	24.3	6.6	0	30.9	
Unshifted	239	0	2	0	241	1	455	0	0	456	0	0	0	0	0	0	240	64	0	304	1001
% Unshifted																					
Bank 1	2	0	0	0	2	1	0	0	0	1	0	0	0	0	0	0	4	3	0	7	10
% Bank 1	0.8	0	0	0	0.8	33.3	0	0	0	0.2	0	0	0	0	0	0	1.6	4.5	0	2.2	1
Bank 2	0	0	0	0	0	1	0	0	0	1	0	0	0	0	0	0	2	0	0	2	3
% Bank 2	0	0	0	0	0	33.3	0	0	0	0.2	0	0	0	0	0	0	0.8	0	0	0.6	0.3

Connecticut Counts LLC

Kensington, Connecticut 06037
(860) 828-1693

File Name : 13378
Site Code : 13378
Start Date : 6/9/2015
Page No : 2

	Ely Lane From North					Hoskins Road From East					From South					Hoskins Road From West					
Start Time	Right	Thru	Left	Peds	App. Total	Right	Thru	Left	Peds	App. Total	Right	Thru	Left	Peds	App. Total	Right	Thru	Left	Peds	App. Total	Int. Total
Peak Hour Analysis From 04:00 PM to 05:45 PM - Peak 1 of 1																					
Peak Hour for Entire Intersection Begins at 05:00 PM																					
05:00 PM	29	0	**1**	0	30	0	58	0	0	58	0	0	0	0	0	0	32	9	0	41	129
05:15 PM	29	0	0	0	29	**1**	65	0	0	66	0	0	0	0	0	0	30	9	0	39	134
05:30 PM	**40**	0	0	0	**40**	0	**73**	0	0	**73**	0	0	0	0	0	0	23	**11**	0	34	**147**
05:45 PM	24	0	0	0	24	0	65	0	0	65	0	0	0	0	0	0	**38**	9	0	**47**	136
Total Volume	122	0	1	0	123	1	261	0	0	262	0	0	0	0	0	0	123	38	0	161	546
% App. Total	99.2	0	0.8	0		0.4	99.6	0	0		0	0	0	0		0	76.4	23.6	0		
PHF	.763	.000	.250	.000	.769	.250	.894	.000	.000	.897	.000	.000	.000	.000	.000	.000	.809	.864	.000	.856	.929

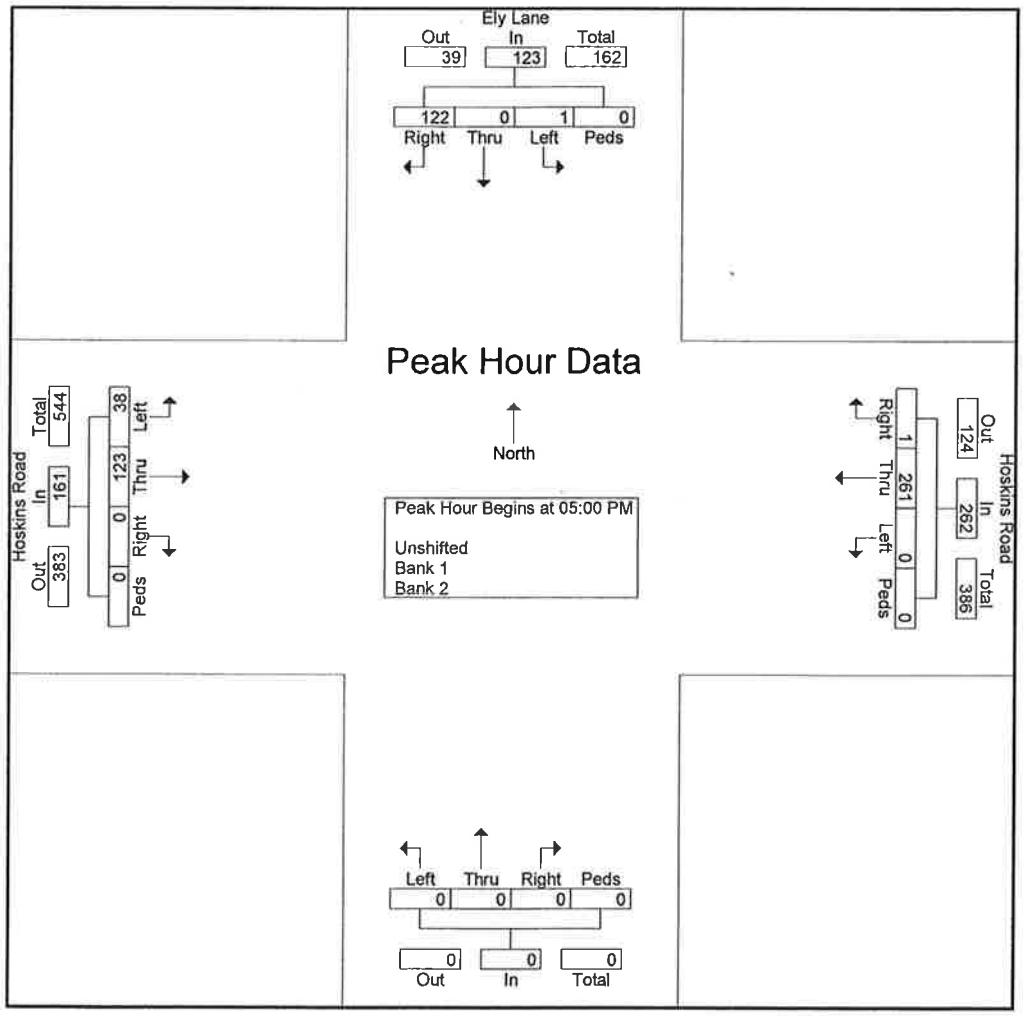

Connecticut Counts LLC

Kensington, Connecticut 06037
(860) 828-1693

Hoskins Road at Old Barge Road
Simsbury, Connecticut

File Name : 13375
Site Code : 13375
Start Date : 6/9/2015
Page No : 1

Groups Printed- Unshifted - Bank 1 - Bank 2

	From North					Hoskins Road From East					Old Barge Road From South					Hoskins Road From West					
Start Time	Right	Thru	Left	Peds	App. Total	Right	Thru	Left	Peds	App. Total	Right	Thru	Left	Peds	App. Total	Right	Thru	Left	Peds	App. Total	Int. Total
07:00 AM	0	0	0	0	0	0	14	0	0	14	3	0	0	0	3	0	96	0	0	96	113
07:15 AM	0	0	0	0	0	0	28	1	0	29	2	0	0	0	2	1	102	0	0	103	134
07:30 AM	0	0	0	0	0	0	30	0	0	30	2	0	0	0	2	0	110	0	0	110	142
07:45 AM	0	0	0	0	0	0	29	0	0	29	3	0	0	0	3	0	90	0	0	90	122
Total	0	0	0	0	0	0	101	1	0	102	10	0	0	0	10	1	398	0	0	399	511
08:00 AM	0	0	0	0	0	0	41	2	0	43	3	0	1	0	4	0	86	0	0	86	133
08:15 AM	0	0	0	0	0	0	36	0	0	36	1	0	1	0	2	0	83	0	0	83	121
08:30 AM	0	0	0	0	0	0	20	1	0	21	2	0	0	0	2	0	70	0	0	70	93
08:45 AM	0	0	0	0	0	0	23	0	0	23	3	0	0	0	3	0	45	0	0	45	71
Total	0	0	0	0	0	0	120	3	0	123	9	0	2	0	11	0	284	0	0	284	418
Grand Total	0	0	0	0	0	0	221	4	0	225	19	0	2	0	21	1	682	0	0	683	929
Apprch %	0	0	0	0		0	98.2	1.8	0		90.5	0	9.5	0		0.1	99.9	0	0		
Total %	0	0	0	0	0	0	23.8	0.4	0	24.2	2	0	0.2	0	2.3	0.1	73.4	0	0	73.5	
Unshifted	0	0	0	0	0	0	210	4	0	214	19	0	2	0	21	1	672	0	0	673	908
% Unshifted																					
Bank 1	0	0	0	0	0	0	5	0	0	5	0	0	0	0	0	0	1	0	0	1	6
% Bank 1	0	0	0	0	0	0	2.3	0	0	2.2	0	0	0	0	0	0	0.1	0	0	0.1	0.6
Bank 2	0	0	0	0	0	0	6	0	0	6	0	0	0	0	0	0	9	0	0	9	15
% Bank 2	0	0	0	0	0	0	2.7	0	0	2.7	0	0	0	0	0	0	1.3	0	0	1.3	1.6

Connecticut Counts LLC

Kensington, Connecticut 06037
(860) 828-1693

File Name : 13375
Site Code : 13375
Start Date : 6/9/2015
Page No : 2

	From North					Hoskins Road From East					Old Barge Road From South					Hoskins Road From West					
Start Time	Right	Thru	Left	Peds	App. Total	Right	Thru	Left	Peds	App. Total	Right	Thru	Left	Peds	App. Total	Right	Thru	Left	Peds	App. Total	Int. Total
Peak Hour Analysis From 07:00 AM to 08:45 AM - Peak 1 of 1																					
Peak Hour for Entire Intersection Begins at 07:15 AM																					
07:15 AM	0	0	0	0	0	0	28	1	0	29	2	0	0	0	2	**1**	102	0	0	103	134
07:30 AM	0	0	0	0	0	0	30	0	0	30	2	0	0	0	2	0	**110**	0	0	**110**	**142**
07:45 AM	0	0	0	0	0	0	29	0	0	29	**3**	0	0	0	3	0	90	0	0	90	122
08:00 AM	0	0	0	0	0	0	**41**	**2**	0	**43**	3	0	**1**	0	**4**	0	86	0	0	86	133
Total Volume	0	0	0	0	0	0	128	3	0	131	10	0	1	0	11	1	388	0	0	389	531
% App. Total	0	0	0	0		0	97.7	2.3	0		90.9	0	9.1	0		0.3	99.7	0	0		
PHF	.000	.000	.000	.000	.000	.000	.780	.375	.000	.762	.833	.000	.250	.000	.688	.250	.882	.000	.000	.884	.935

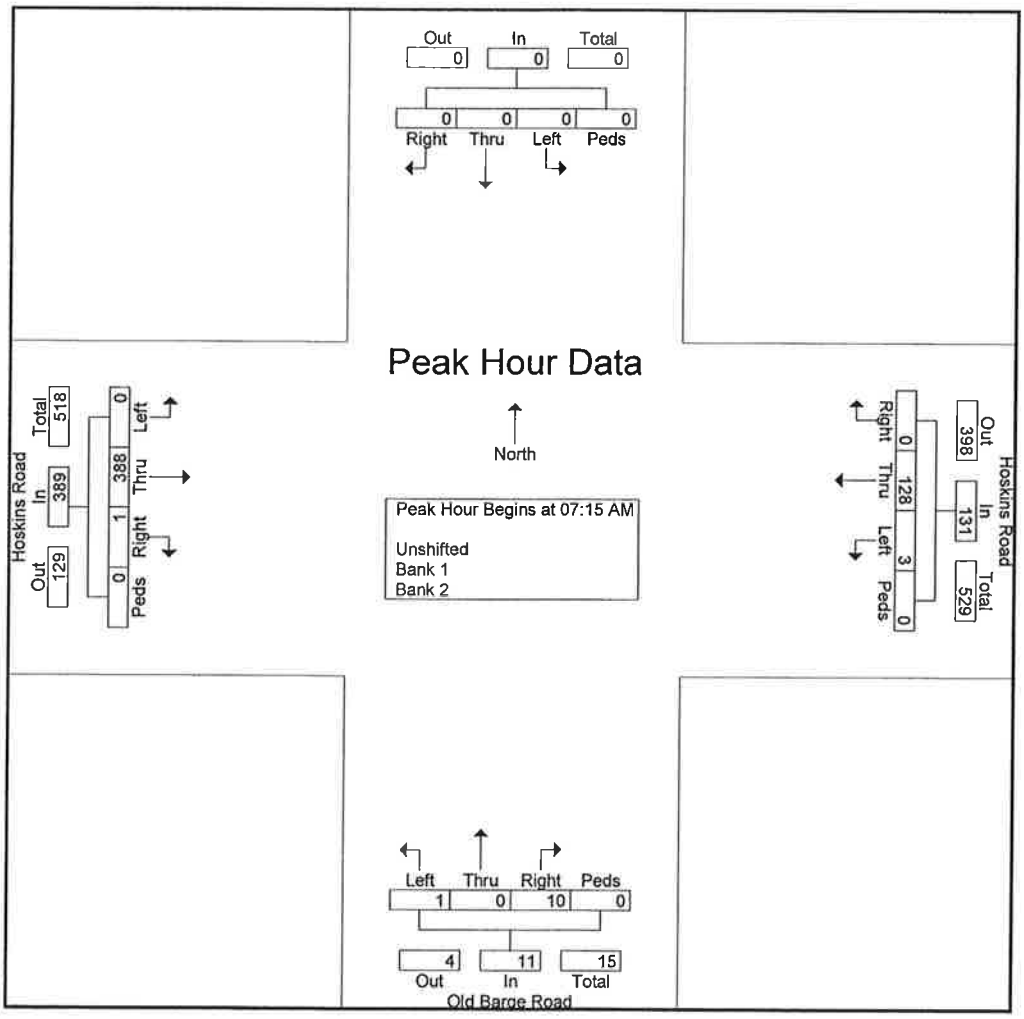

Connecticut Counts LLC

Kensington, Connecticut 06037
(860) 828-1693

Hoskins Rd at Old Barge Road
Simsbury, Connecticut

File Name : 13376
Site Code : 13376
Start Date : 6/9/2015
Page No : 1

Groups Printed- Unshifted - Bank 1 - Bank 2

	From North					Hoskins Road From East					Old Barge Road From South					Hoskins Road From West					
Start Time	Right	Thru	Left	Peds	App. Total	Right	Thru	Left	Peds	App. Total	Right	Thru	Left	Peds	App. Total	Right	Thru	Left	Peds	App. Total	Int. Total
04:00 PM	0	0	0	0	0	0	78	1	0	79	2	0	0	1	3	1	35	0	0	36	118
04:15 PM	0	0	0	0	0	0	85	2	0	87	3	0	2	0	5	2	37	0	0	39	131
04:30 PM	0	0	0	0	0	0	88	4	0	92	2	0	3	0	5	0	32	0	0	32	129
04:45 PM	0	0	0	0	0	0	87	1	0	88	0	0	0	0	0	1	39	0	0	40	128
Total	0	0	0	0	0	0	338	8	0	346	7	0	5	1	13	4	143	0	0	147	506
05:00 PM	0	0	0	0	0	0	94	1	0	95	2	0	0	2	4	0	36	0	0	36	135
05:15 PM	0	0	0	0	0	0	113	5	0	118	1	0	0	0	1	0	32	0	0	32	151
05:30 PM	0	0	0	0	0	0	75	3	0	78	0	0	0	2	2	0	47	0	0	47	127
05:45 PM	0	0	0	0	0	0	76	5	0	81	1	0	0	0	1	4	23	0	0	27	109
Total	0	0	0	0	0	0	358	14	0	372	4	0	0	4	8	4	138	0	0	142	522
Grand Total	0	0	0	0	0	0	696	22	0	718	11	0	5	5	21	8	281	0	0	289	1028
Apprch %	0	0	0	0		0	96.9	3.1	0		52.4	0	23.8	23.8		2.8	97.2	0	0		
Total %	0	0	0	0	0	0	67.7	2.1	0	69.8	1.1	0	0.5	0.5	2	0.8	27.3	0	0	28.1	
Unshifted	0	0	0	0	0	0	694	22	0	716	11	0	5	5	21	8	279	0	0	287	1024
% Unshifted																					
Bank 1	0	0	0	0	0	0	1	0	0	1	0	0	0	0	0	0	0	0	0	0	1
% Bank 1	0	0	0	0	0	0	0.1	0	0	0.1	0	0	0	0	0	0	0	0	0	0	0.1
Bank 2	0	0	0	0	0	0	1	0	0	1	0	0	0	0	0	0	2	0	0	2	3
% Bank 2	0	0	0	0	0	0	0.1	0	0	0.1	0	0	0	0	0	0	0.7	0	0	0.7	0.3

Connecticut Counts LLC

Kensington, Connecticut 06037
(860) 828-1693

File Name : 13376
Site Code : 13376
Start Date : 6/9/2015
Page No : 2

	From North					Hoskins Road From East					Old Barge Road From South					Hoskins Road From West					
Start Time	Right	Thru	Left	Peds	App. Total	Right	Thru	Left	Peds	App. Total	Right	Thru	Left	Peds	App. Total	Right	Thru	Left	Peds	App. Total	Int. Total
Peak Hour Analysis From 04:00 PM to 05:15 PM - Peak 1 of 1																					
Peak Hour for Entire Intersection Begins at 04:30 PM																					
04:30 PM	0	0	0	0	0	0	88	4	0	92	**2**	0	**3**	0	**5**	0	32	0	0	32	129
04:45 PM	0	0	0	0	0	0	87	1	0	88	0	0	0	0	0	**1**	**39**	0	0	**40**	128
05:00 PM	0	0	0	0	0	0	94	1	0	95	2	0	0	**2**	4	0	36	0	0	36	135
05:15 PM	0	0	0	0	0	0	**113**	**5**	0	**118**	1	0	0	0	1	0	32	0	0	32	**151**
Total Volume	0	0	0	0	0	0	382	11	0	393	5	0	3	2	10	1	139	0	0	140	543
% App. Total	0	0	0	0		0	97.2	2.8	0		50	0	30	20		0.7	99.3	0	0		
PHF	.000	.000	.000	.000	.000	.000	.845	.550	.000	.833	.625	.000	.250	.250	.500	.250	.891	.000	.000	.875	.899

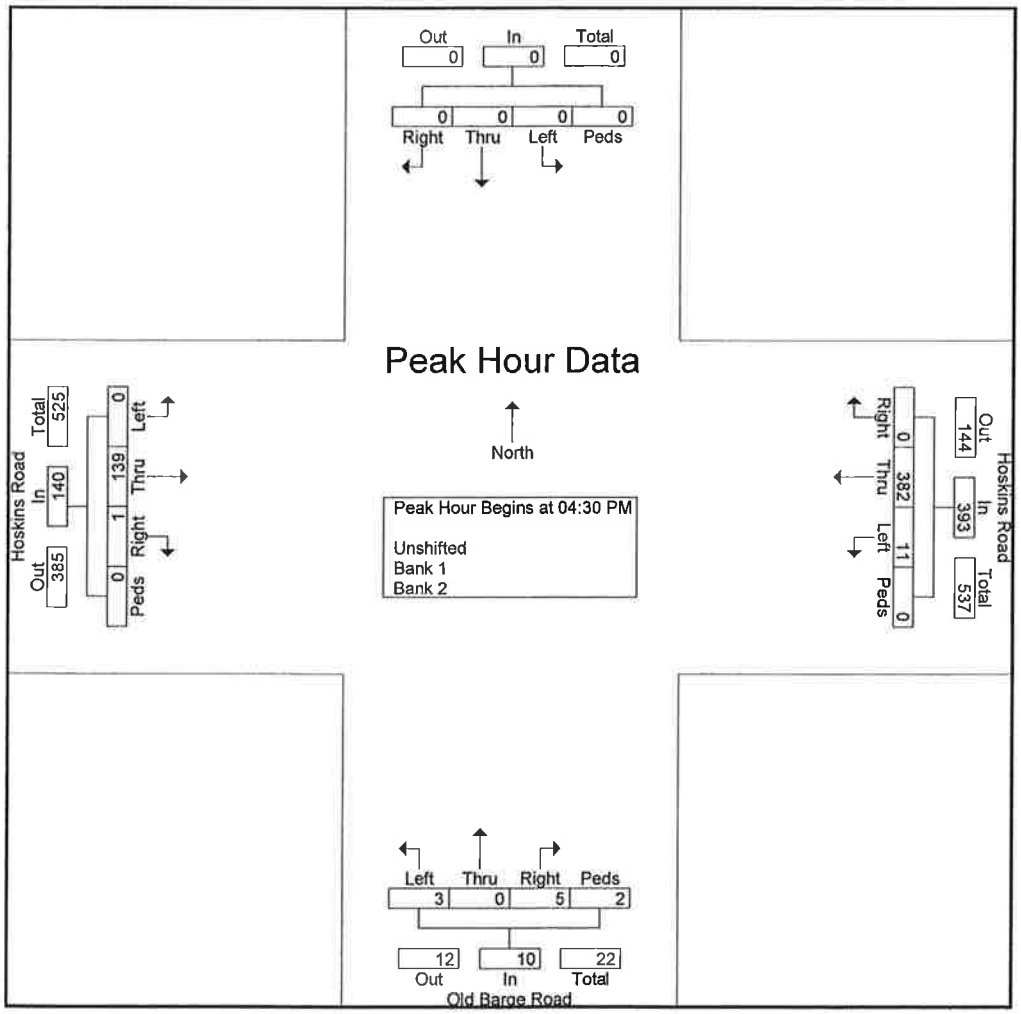

APPENDIX B:
Accident Data

Town of Simsbury Route/Road Mile Marker 0.00 to 0.17

Total of 4 accidents

Date	Town	Road	Mile	Location Description	DOT #	Police Case #	Contributing Factor	Lighting	Surface Condition	Weather Condition	Collision Type
Sun Dec-21-14 9:09	Simsbury	HOSKINS RD	0.09	500 feet West of RT 10&US202-HOPMEADOW ST	2238790	1400030370	Failed To Grant Right Of Way	Daylight	Dry	No Adverse Condition	Turning - Intersecting Paths

Contrib. Factor	Direction	Veh Type	Maneuver Prefix	Maneuver Suffix	1st/2nd Object Struck	1st/2nd Object Location	Injuries K	A	B	C	Total
	West	Automobile	None Apply	Vehicle Going Straight			0	0	0	0	0
*	South	Single Unit Truck 2 Axle 4 Tires	None Apply	Vehicle Turning Left From Driveway			0	0	0	0	0

Date	Town	Road	Mile	Location Description	DOT #	Police Case #	Contributing Factor	Lighting	Surface Condition	Weather Condition	Collision Type
Sat Jan-11-14 8:37	Simsbury	HOSKINS RD	0.10	1 tenths West of RT 10&US202-HOPMEADOW ST	2151889	1400000850	Slippery Surface	Daylight	Ice	Rain	Fixed Object

Contrib. Factor	Direction	Veh Type	Maneuver Prefix	Maneuver Suffix	1st/2nd Object Struck	1st/2nd Object Location	Injuries K	A	B	C	Total
*	East	Automobile	None Apply	Vehicle Going Straight	Other	Off Road and Shoulder, Right	0	0	0	0	0

Date	Town	Road	Mile	Location Description	DOT #	Police Case #	Contributing Factor	Lighting	Surface Condition	Weather Condition	Collision Type
Sat Jan-11-14 9:09	Simsbury	HOSKINS RD	0.10	1 tenths West of RT 10&US202-HOPMEADOW ST	2151894	1400000853	Slippery Surface	Daylight	Ice	Rain	Fixed Object

Contrib. Factor	Direction	Veh Type	Maneuver Prefix	Maneuver Suffix	1st/2nd Object Struck	1st/2nd Object Location	Injuries K	A	B	C	Total
*	East	Single Unit Truck 2 Axle 6 Tires	None Apply	Vehicle Negotiating Curve	Other / Curbing	Off Road and Shoulder, Right / Off Road and Shoulder, Left	0	0	0	0	0

Date	Town	Road	Mile	Location Description	DOT #	Police Case #	Contributing Factor	Lighting	Surface Condition	Weather Condition	Collision Type
Fri Jul-20-12 8:31	Simsbury	HOSKINS RD	0.17	at ELY LA	1880120	1200020803	Failed To Grant Right Of Way	Daylight	Wet	Rain	Turning - Opposite Direction

Contrib. Factor	Direction	Veh Type	Maneuver Prefix	Maneuver Suffix	1st/2nd Object Struck	1st/2nd Object Location	Injuries K	A	B	C	Total
*	West	Automobile	None Apply	Vehicle Turning Left from Proper Lane			0	0	0	0	0
	East	Automobile	None Apply	Vehicle Going Straight			0	0	0	0	0

Town of Simsbury Route/Road 010 Mile Marker 46.81 to 47.83

Total of 25 accidents

Date	Town	Road	Mile	Location Description	DOT #	Police Case #	Contributing Factor	Lighting	Surface Condition	Weather Condition	Collision Type
Wed Mar-05-14 7:35	Simsbury	(CT route 010)	46.95	at HOSKINS RD	2166567	1400004779	Following Too Closely	Daylight	Dry	No Adverse Condition	Rear-end

Contrib. Factor	Direction	Veh Type	Maneuver Prefix	Maneuver Suffix	1st/2nd Object Struck	1st/2nd Object Location	Injuries K	A	B	C	Total
	East	Automobile	Vehicle Stopped For	Traffic Signal			0	0	0	0	0
*	East	Automobile	Vehicle Skidded Slowing or Stopping For	Stopped Vehicle			0	0	0	0	0

Date	Town	Road	Mile	Location Description	DOT #	Police Case #	Contributing Factor	Lighting	Surface Condition	Weather Condition	Collision Type
Fri Dec-12-14 8:21	Simsbury	(CT route 010)	46.95	at HOSKINS RD	2238773	1400029607	Following Too Closely	Daylight	Dry	No Adverse Condition	Rear-end

Contrib. Factor	Direction	Veh Type	Maneuver Prefix	Maneuver Suffix	1st/2nd Object Struck	1st/2nd Object Location	Injuries K	A	B	C	Total
	East	Passenger Van	Vehicle Stopped For	Traffic Signal			0	0	0	0	0
*	East	Automobile	None Apply	Vehicle Going Straight			0	0	0	0	0

Date	Town	Road	Mile	Location Description	DOT #	Police Case #	Contributing Factor	Lighting	Surface Condition	Weather Condition	Collision Type
Fri Jul-13-12 8:36	Simsbury	(CT route 010)	47.00	at DR TO ANTONIO'S RESTAURANT	1873016	1200020092	Violated Traffic Control	Daylight	Dry	No Adverse Condition	Turning - Intersecting Paths

Contrib. Factor	Direction	Veh Type	Maneuver Prefix	Maneuver Suffix	1st/2nd Object Struck	1st/2nd Object Location	Injuries K	A	B	C	Total
*	West	Automobile	None Apply	Vehicle Turning Left From Driveway			0	0	0	0	0
	North	Pedal Cycle	None Apply	Vehicle Going Straight			0	1	0	0	1

Date	Town	Road	Mile	Location Description	DOT #	Police Case #	Contributing Factor	Lighting	Surface Condition	Weather Condition	Collision Type
Tue Jul-10-12 9:38	Simsbury	(CT route 010)	47.03	on ELY LA	1880109	1200019825	Following Too Closely	Daylight	Dry	No Adverse Condition	Rear-end

Contrib. Factor	Direction	Veh Type	Maneuver Prefix	Maneuver Suffix	1st/2nd Object Struck	1st/2nd Object Location	Injuries K	A	B	C	Total
	East	Automobile	Vehicle Stopped For	Traffic Sign			0	0	0	0	0
*	East	Passenger Van	None Apply	Vehicle Going Straight			0	0	0	0	0

Town of Simsbury Route/Road 010 Mile Marker 46.81 to 47.83

Total of 25 accidents

Date	Town	Road	Mile	Location Description	DOT #	Police Case #	Contributing Factor	Lighting	Surface Condition	Weather Condition	Collision Type
Thu Sep-13-12 8:23	Simsbury	(CT route 010)	46.95	on HOSKINS RD	1891832	1200026507	Following Too Closely	Daylight	Dry	No Adverse Condition	Rear-end

Contrib. Factor	Direction	Veh Type	Maneuver Prefix	Maneuver Suffix	1st/2nd Object Struck	1st/2nd Object Location	Injuries K	A	B	C	Total
*	East	Automobile	None Apply	Vehicle Going Straight			0	0	0	0	0
	East	Automobile	Vehicle Stopped For	Traffic Sign			0	0	0	0	0

Date	Town	Road	Mile	Location Description	DOT #	Police Case #	Contributing Factor	Lighting	Surface Condition	Weather Condition	Collision Type
Tue Sep-25-12 6:48	Simsbury	(CT route 010)	46.95	at HOSKINS RD	1891658	1200027704	Following Too Closely	Daylight	Dry	No Adverse Condition	Rear-end

Contrib. Factor	Direction	Veh Type	Maneuver Prefix	Maneuver Suffix	1st/2nd Object Struck	1st/2nd Object Location	Injuries K	A	B	C	Total
*	East	Automobile	Vehicle Slowing For	Stopped Vehicle			0	0	0	0	0
	East	Single Unit Truck 2 Axle 4 Tires	Vehicle Stopped For	Traffic Sign			0	0	0	0	0

Date	Town	Road	Mile	Location Description	DOT #	Police Case #	Contributing Factor	Lighting	Surface Condition	Weather Condition	Collision Type
Thu Nov-15-12 17:21	Simsbury	(CT route 010)	46.95	at HOSKINS RD	2021720	1200032762	Failed To Grant Right Of Way	Dark - Lighted	Dry	No Adverse Condition	Turning - Intersecting Paths

Contrib. Factor	Direction	Veh Type	Maneuver Prefix	Maneuver Suffix	1st/2nd Object Struck	1st/2nd Object Location	Injuries K	A	B	C	Total
	South	Automobile	None Apply	Vehicle Going Straight			0	0	0	0	0
*	East	Automobile	None Apply	Vehicle Turning Left from Proper Lane			0	0	0	0	0

Date	Town	Road	Mile	Location Description	DOT #	Police Case #	Contributing Factor	Lighting	Surface Condition	Weather Condition	Collision Type
Tue Dec-11-12 8:35	Simsbury	(CT route 010)	46.95	on HOSKINS RD	2036185	1200035384	Following Too Closely	Daylight	Dry	No Adverse Condition	Rear-end

Contrib. Factor	Direction	Veh Type	Maneuver Prefix	Maneuver Suffix	1st/2nd Object Struck	1st/2nd Object Location	Injuries K	A	B	C	Total
	East	Automobile	Vehicle Stopped For	Traffic Sign			0	0	0	0	0
*	East	Automobile	None Apply	Vehicle Going Straight			0	0	0	0	0

Town of Simsbury Route/Road 010 Mile Marker 46.81 to 47.83

Total of 25 accidents

Date	Town	Road	Mile	Location Description	DOT #	Police Case #	Contributing Factor	Lighting	Surface Condition	Weather Condition	Collision Type
Wed Jan-02-13 10:18	Simsbury	(CT route 010)	46.95	at HOSKINS RD	2046508	1300000213	Failed To Grant Right Of Way	Daylight	Dry	No Adverse Condition	Turning - Intersecting Paths

Contrib. Factor	Direction	Veh Type	Maneuver Prefix	Maneuver Suffix	1st/2nd Object Struck	1st/2nd Object Location	Injuries K	A	B	C	Total
*	West	Single Unit Truck 2 Axle 4 Tires	None Apply	Vehicle Turning Left from Proper Lane			0	0	0	0	0
	East	Automobile	Vehicle Stopped For	Previous Accident			0	0	0	0	0
	South	Automobile	None Apply	Vehicle Going Straight			0	0	1	0	1

Date	Town	Road	Mile	Location Description	DOT #	Police Case #	Contributing Factor	Lighting	Surface Condition	Weather Condition	Collision Type
Wed Jan-02-13 11:06	Simsbury	(CT route 010)	46.95	on HOSKINS RD	2046895	1300000215	Following Too Closely	Daylight	Dry	No Adverse Condition	Rear-end

Contrib. Factor	Direction	Veh Type	Maneuver Prefix	Maneuver Suffix	1st/2nd Object Struck	1st/2nd Object Location	Injuries K	A	B	C	Total
*	East	Automobile	None Apply	Vehicle Going Straight			0	0	0	0	0
	East	Automobile	Vehicle Stopped For	Traffic Sign			0	0	0	0	0

Date	Town	Road	Mile	Location Description	DOT #	Police Case #	Contributing Factor	Lighting	Surface Condition	Weather Condition	Collision Type
Tue Jan-08-13 0:31	Simsbury	(CT route 010)	46.95	at HOSKINS RD	2046977	1300000824	Under The Influence	Dark - Lighted	Dry	No Adverse Condition	Fixed Object

Contrib. Factor	Direction	Veh Type	Maneuver Prefix	Maneuver Suffix	1st/2nd Object Struck	1st/2nd Object Location	Injuries K	A	B	C	Total
*	North	Automobile	None Apply	Vehicle Turning Left from Proper Lane	Bank, Ledge, Rock (Off Road) / Highway Sign, Post, Delineator	Off Road and Shoulder, Right / Off Road and Shoulder, Right	0	0	0	0	0

Date	Town	Road	Mile	Location Description	DOT #	Police Case #	Contributing Factor	Lighting	Surface Condition	Weather Condition	Collision Type
Sun Jul-07-13 15:12	Simsbury	(CT route 010)	46.95	at HOSKINS RD	2105704	1300019457	Driver Lost Control	Daylight	Dry	No Adverse Condition	Rear-end

Contrib. Factor	Direction	Veh Type	Maneuver Prefix	Maneuver Suffix	1st/2nd Object Struck	1st/2nd Object Location	Injuries K	A	B	C	Total
*	South	Automobile	None Apply	Vehicle Going Straight			0	0	0	0	0
	South	Automobile	Vehicle Stopped For	Traffic Signal			0	0	0	0	0

APPENDIX C:
Other Development Projects

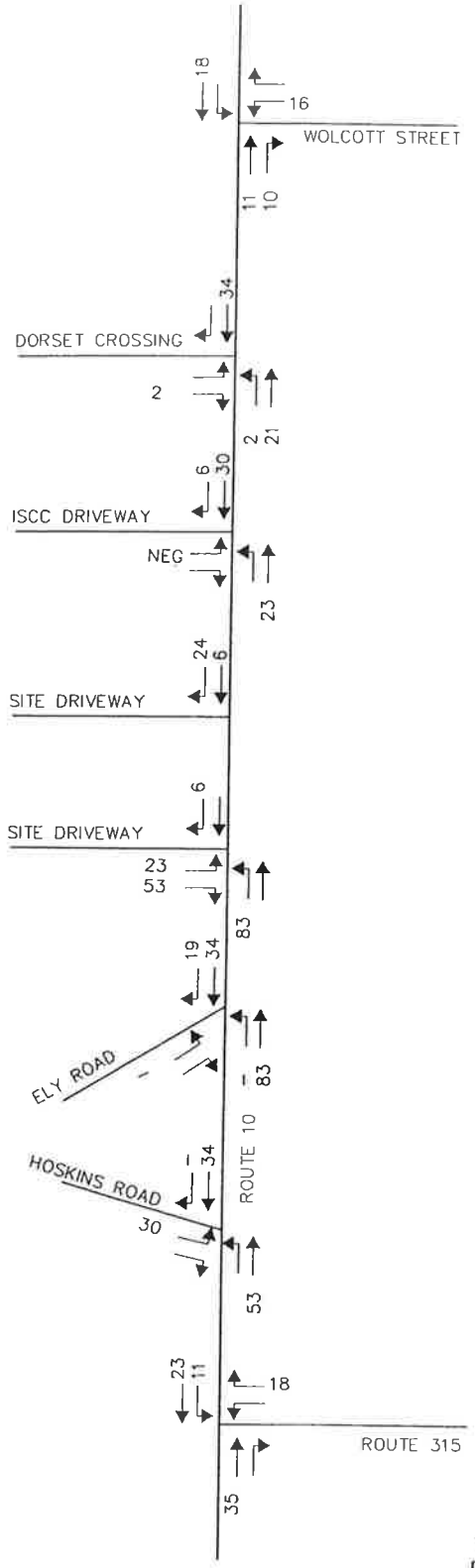

ENTER	119
EXIT	76
TOTAL	195

FIGURE 6 7-10-12

SITE GENERATED TRAFFIC
AM PEAK HOUR

BIG Y
ROUTE 10/202
SIMSBURY, CONNECTICUT

F. A. Hesketh & Associates, Inc.
8 CREAMERY BROOK, EAST GRANBY, CT 06026

FAH TRAFFIC PLANNING ENGINEERING DESIGN

NOT TO SCALE

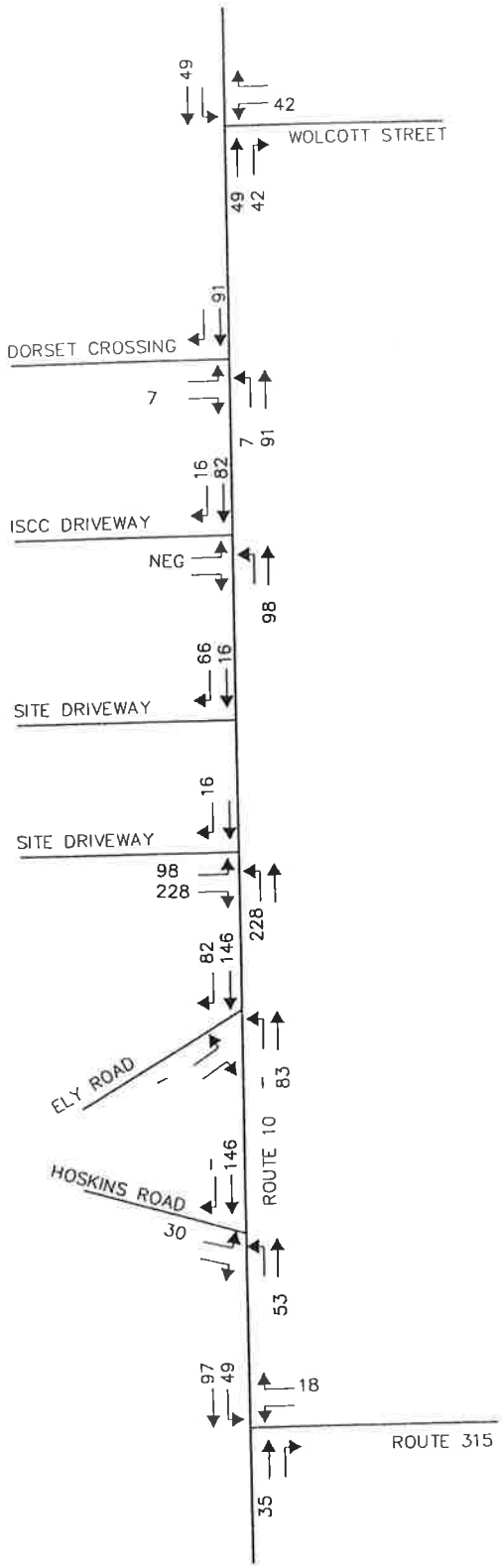

ENTER	326
EXIT	326
TOTAL	652

FIGURE 7 7-10-12

SITE GENERATED TRAFFIC
PM AND SAT PEAK HOURS

BIG Y
ROUTE 10/202
SIMSBURY, CONNECTICUT

F. A. Hesketh & Associates, Inc.
6 CREAMERY BROOK, EAST GRANBY, CT 06026

FAH TRAFFIC PLANNING ENGINEERING DESIGN

NOT TO SCALE

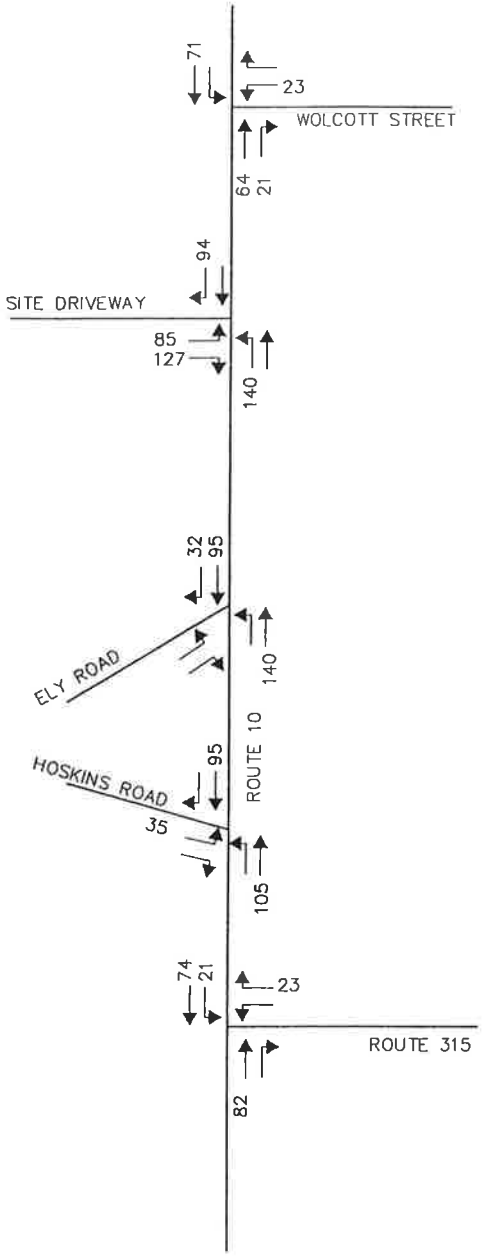

ENTER	234
EXIT	212
TOTAL	446

FIGURE 6 4-09-12

SITE GENERATED TRAFFIC
AM PEAK HOUR
WITH RESIDENTIAL

DORSET CROSSING
ROUTE 10/202
SIMSBURY, CONNECTICUT

F. A. Hesketh & Associates, Inc.
6 CREAMERY BROOK, EAST GRANBY, CT 06026

FAH TRAFFIC PLANNING ENGINEERING DESIGN

NOT TO SCALE

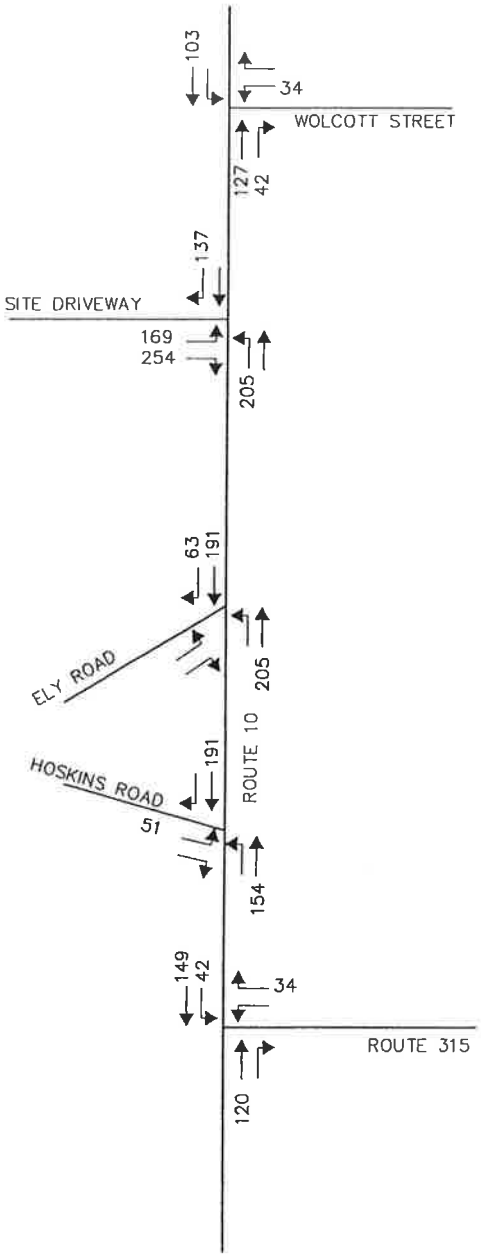

ENTER	342
EXIT	423
TOTAL	763

FIGURE 7 4-09-12

SITE GENERATED TRAFFIC
PM PEAK HOUR
WITH RESIDENTIAL

DORSET CROSSING
ROUTE 10/202
SIMSBURY, CONNECTICUT

F. A. Hesketh & Associates, Inc.
6 CREAMERY BROOK, EAST GRANBY, CT 06026

FAH TRAFFIC PLANNING ENGINEERING DESIGN

NOT TO SCALE

APPENDIX D:
Speed Data

COMBINED EASTBOUND AND WESTBOUND 85TH PERCENTILE SPEED

	TOTAL	85TH PERCENTILE	TOTAL * 85TH PERCENTILE
	1705		
	2581		
EASTBOUND	2600		
	2209		
	657		
	9752	42	409584
	2404		
	2633		
WESTBOUND	2518		
	2004		
	2		
	9561	40	382440
EB&WB TOTAL	19313		792024

WEIGHTED AVERAGE = (TOTAL*85TH PERCENTILE)/(EB&WB TOTAL)	**41.0**

Hoskins Rd West of Old Barge Road
Simsbury, Connecticut

Connecticut Counts LLC
63 Sugar Maple Lane
Kensington, Connecticut 06037
_(860) 828-1693_

Site Code: 3643
Station ID:

Latitude: 0' 0.000 Undefined

Start	15-Jun-15		Tue		Wed		Thu		Fri		Sat		Sun		Week Average	
Time	Eastbound	Westbou	Eastbou	Westbou	Eastbou	Westbou	Eastbou	Westbou	Eastbou	Westbou	Eastbou	Westbou	Eastbou	Westbou	Eastbou	Westbou
12:00 AM	*	*	*	*	*	*	0	9	8	11	9	29	45	0	16	12
01:00	*	*	*	*	*	*	2	11	4	16	6	18	20	0	8	11
02:00	*	*	*	*	*	*	0	3	2	7	3	16	12	0	4	6
03:00	*	*	*	*	*	*	4	1	4	3	4	5	3	0	4	2
04:00	*	*	*	*	*	*	13	3	8	2	2	3	5	0	7	2
05:00	*	*	*	*	*	*	78	9	52	3	17	3	9	0	39	4
06:00	*	*	*	*	*	*	161	42	166	27	60	13	23	0	102	20
07:00	*	*	*	*	*	*	347	79	306	64	90	41	66	0	202	46
08:00	*	*	*	*	*	*	262	101	280	90	156	82	115	1	203	68
09:00	*	*	*	*	202	92	172	100	192	115	207	118	176	0	190	85
10:00	*	*	*	*	132	132	164	111	173	116	210	164	183	1	172	105
11:00	*	*	*	*	154	106	144	110	124	133	180	158	*	*	150	127
12:00 PM	*	*	*	*	153	139	121	133	145	163	153	196	*	*	143	158
01:00	*	*	*	*	132	145	128	129	124	147	157	143	*	*	135	141
02:00	*	*	*	*	129	153	127	148	137	159	164	170	*	*	139	158
03:00	*	*	*	*	130	192	136	216	130	202	116	161	*	*	128	193
04:00	*	*	*	*	145	263	138	254	165	256	114	140	*	*	140	228
05:00	*	*	*	*	182	350	175	368	177	328	118	159	*	*	163	301
06:00	*	*	*	*	132	274	161	258	149	201	109	125	*	*	138	214
07:00	*	*	*	*	102	203	107	191	97	164	71	104	*	*	94	166
08:00	*	*	*	*	57	159	66	148	72	119	65	90	*	*	65	129
09:00	*	*	*	*	34	106	35	116	46	95	56	66	*	*	43	96
10:00	*	*	*	*	12	57	23	67	21	54	72	0	*	*	32	44
11:00	*	*	*	*	9	33	17	26	18	43	70	0	*	*	28	26
Lane	0	0	0	0	1705	2404	2581	2633	2600	2518	2209	2004	657	2	2345	2342
Day	0		0		4109		5214		5118		4213		659		4687	
AM Peak					09:00	10:00	07:00	10:00	07:00	11:00	10:00	10:00	10:00	08:00	08:00	11:00
Vol.					202	132	347	111	306	133	210	164	183	1	203	127
PM Peak					17:00	17:00	17:00	17:00	17:00	17:00	14:00	12:00			17:00	17:00
Vol.					182	350	175	368	177	328	164	196			163	301
Comb. Total	0		0		4109		5214		5118		4213		659		4687	

ADT ADT 5,166 AADT 5,166

Hoskins Rd West of Old Barge Road
Simsbury, Connecticut

Connecticut Counts LLC
63 Sugar Maple Lane
Kensington, Connecticut 06037
(860) 828-1693

Site Code: 3643
Station ID:

Eastbound

Latitude: 0' 0.000 Undefined

Start Time	1 15	16 20	21 25	26 30	31 35	36 40	41 45	46 50	51 55	56 60	61 65	66 70	71 75	76 999	Total	85th Percent	95th Percent
06/17/15	*	*	*	*	*	*	*	*	*	*	*	*	*	*	*	*	*
01:00	*	*	*	*	*	*	*	*	*	*	*	*	*	*	*	*	*
02:00	*	*	*	*	*	*	*	*	*	*	*	*	*	*	*	*	*
03:00	*	*	*	*	*	*	*	*	*	*	*	*	*	*	*	*	*
04:00	*	*	*	*	*	*	*	*	*	*	*	*	*	*	*	*	*
05:00	*	*	*	*	*	*	*	*	*	*	*	*	*	*	*	*	*
06:00	*	*	*	*	*	*	*	*	*	*	*	*	*	*	*	*	*
07:00	*	*	*	*	*	*	*	*	*	*	*	*	*	*	*	*	*
08:00	*	*	*	*	*	*	*	*	*	*	*	*	*	*	*	*	*
09:00	**1**	0	0	**12**	37	**96**	46	**10**	0	0	0	0	0	0	**202**	42	45
10:00	0	0	**2**	7	20	45	**47**	9	**1**	**1**	0	0	0	0	132	44	46
11:00	0	0	1	3	**41**	69	38	1	0	0	0	**1**	0	0	154	42	44
12 PM	0	0	0	3	**32**	61	**50**	6	1	0	0	0	0	0	153	43	45
13:00	0	0	1	3	29	59	30	9	1	0	0	0	0	0	132	43	46
14:00	0	0	0	5	30	68	19	5	**2**	0	0	0	0	0	129	41	46
15:00	0	0	0	6	30	54	35	5	0	0	0	0	0	0	130	42	45
16:00	0	0	1	4	22	78	35	5	0	0	0	0	0	0	145	42	45
17:00	0	0	**3**	**9**	28	**87**	45	**10**	0	0	0	0	0	0	**182**	43	45
18:00	0	0	1	4	16	60	44	6	1	0	0	0	0	0	132	43	46
19:00	0	0	0	1	20	46	28	6	1	0	0	0	0	0	102	43	46
20:00	0	0	0	3	10	29	10	5	0	0	0	0	0	0	57	43	47
21:00	0	0	0	0	6	13	12	2	1	0	0	0	0	0	34	43	45
22:00	0	**1**	0	0	1	3	6	1	0	0	0	0	0	0	12	44	45
23:00	0	1	1	0	2	3	1	1	0	0	0	0	0	0	9	37	37
Total	1	2	10	60	324	771	446	81	8	1	0	1	0	0	1705		
Percent	0.1%	0.1%	0.6%	3.5%	19.0%	45.2%	26.2%	4.8%	0.5%	0.1%	0.0%	0.1%	0.0%	0.0%			
AM Peak	09:00		10:00	09:00	11:00	09:00	10:00	09:00	10:00	10:00		11:00			09:00		
Vol.	1		2	12	41	96	47	10	1	1		1			202		
PM Peak		22:00	17:00	17:00	12:00	17:00	12:00	17:00	14:00						17:00		
Vol.		1	3	9	32	87	50	10	2						182		

Hoskins Rd West of Old Barge Road
Simsbury, Connecticut

Connecticut Counts LLC
63 Sugar Maple Lane
Kensington, Connecticut 06037
(860) 828-1693

Site Code: 3643
Station ID:

Eastbound

Latitude: 0' 0.000 Undefined

Start Time	1 15	16 20	21 25	26 30	31 35	36 40	41 45	46 50	51 55	56 60	61 65	66 70	71 75	76 999	Total	85th Percent	95th Percent
06/18/15	0	0	0	0	0	0	0	0	0	0	0	0	0	0	0	*	*
01:00	0	1	0	0	1	0	0	0	0	0	0	0	0	0	2	*	*
02:00	0	0	0	0	0	0	0	0	0	0	0	0	0	0	0	*	*
03:00	0	0	0	0	1	1	2	0	0	0	0	0	0	0	4	*	*
04:00	0	0	1	0	0	5	5	1	1	0	0	0	0	0	13	44	45
05:00	0	0	0	0	6	37	30	5	0	0	0	0	0	0	78	44	46
06:00	0	0	0	1	23	65	57	15	0	0	0	0	0	0	161	44	47
07:00	0	1	5	13	34	167	117	10	0	0	0	0	0	0	347	43	45
08:00	1	2	1	4	49	126	72	7	0	0	0	0	0	0	262	42	45
09:00	0	0	0	1	27	84	50	9	1	0	0	0	0	0	172	43	46
10:00	1	0	1	6	32	78	41	4	1	0	0	0	0	0	164	42	45
11:00	0	1	0	2	25	70	39	7	0	0	0	0	0	0	144	43	46
12 PM	0	0	1	2	18	60	31	9	0	0	0	0	0	0	121	43	46
13:00	0	0	1	4	25	49	42	7	0	0	0	0	0	0	128	43	46
14:00	0	3	0	3	30	50	36	5	0	0	0	0	0	0	127	43	45
15:00	0	0	1	4	24	70	31	6	0	0	0	0	0	0	136	42	45
16:00	0	0	0	3	26	70	33	4	1	0	0	1	0	0	138	42	45
17:00	0	0	1	2	11	88	66	7	0	0	0	0	0	0	175	43	45
18:00	0	0	1	5	22	68	53	12	0	0	0	0	0	0	161	43	46
19:00	0	0	0	4	20	55	26	1	0	1	0	0	0	0	107	41	44
20:00	0	0	0	4	16	29	15	2	0	0	0	0	0	0	66	41	44
21:00	1	0	0	4	6	16	8	0	0	0	0	0	0	0	35	41	44
22:00	0	0	1	0	4	11	5	2	0	0	0	0	0	0	23	43	45
23:00	0	0	0	1	5	4	4	3	0	0	0	0	0	0	17	45	47
Total	3	8	14	63	405	1203	763	116	4	1	0	1	0	0	2581		
Percent	0.1%	0.3%	0.5%	2.4%	15.7%	46.6%	29.6%	4.5%	0.2%	0.0%	0.0%	0.0%	0.0%	0.0%			
AM Peak	08:00	08:00	07:00	07:00	08:00	07:00	07:00	06:00	04:00						07:00		
Vol.	1	2	5	13	49	167	117	15	1						347		
PM Peak	21:00	14:00	12:00	18:00	14:00	17:00	17:00	18:00	16:00	19:00		16:00			17:00		
Vol.	1	3	1	5	30	88	66	12	1	1		1			175		

Hoskins Rd West of Old Barge Road
Simsbury, Connecticut

Connecticut Counts LLC
63 Sugar Maple Lane
Kensington, Connecticut 06037
(860) 828-1693

Site Code: 3643
Station ID:

Eastbound

Latitude: 0' 0.000 Undefined

Start Time	1 15	16 20	21 25	26 30	31 35	36 40	41 45	46 50	51 55	56 60	61 65	66 70	71 75	76 999	Total	85th Percent	95th Percent
06/19/15	0	0	0	1	1	3	3	0	0	0	0	0	0	0	8	41	42
01:00	0	0	1	3	0	0	0	0	0	0	0	0	0	0	4	27	27
02:00	0	0	0	0	0	1	1	0	0	0	0	0	0	0	2	*	*
03:00	0	0	0	0	2	0	2	0	0	0	0	0	0	0	4	*	*
04:00	0	1	0	0	2	1	3	1	0	0	0	0	0	0	8	42	42
05:00	0	0	0	1	8	31	11	1	0	0	0	0	0	0	52	41	44
06:00	0	0	0	1	16	84	57	6	2	0	0	0	0	0	166	43	45
07:00	0	**2**	0	6	34	**165**	**83**	**12**	**4**	0	0	0	0	0	**306**	43	45
08:00	0	0	**2**	**9**	**41**	148	67	11	2	0	0	0	0	0	280	42	45
09:00	0	0	0	5	30	78	67	12	0	0	0	0	0	0	192	43	46
10:00	**1**	0	1	6	21	84	48	9	3	0	0	0	0	0	173	43	46
11:00	0	0	2	1	20	56	38	6	1	0	0	0	0	0	124	43	46
12 PM	**2**	0	0	3	13	78	43	5	0	**1**	0	0	0	0	145	43	45
13:00	0	0	0	1	21	67	30	4	0	1	0	0	0	0	124	42	45
14:00	0	**2**	**2**	**9**	26	56	38	2	**1**	1	0	0	0	0	137	42	44
15:00	0	0	2	4	21	50	44	8	1	0	0	0	0	0	130	43	46
16:00	0	0	0	1	29	70	**55**	**9**	1	0	0	0	0	0	165	43	46
17:00	0	0	0	3	21	**95**	53	5	0	0	0	0	0	0	**177**	43	45
18:00	1	0	2	9	**30**	51	51	5	0	0	0	0	0	0	149	43	45
19:00	0	1	0	1	12	48	26	9	0	0	0	0	0	0	97	43	47
20:00	0	0	1	1	21	31	18	0	0	0	0	0	0	0	72	42	44
21:00	1	1	1	0	8	21	13	1	0	0	0	0	0	0	46	42	44
22:00	0	0	1	0	3	11	5	1	0	0	0	0	0	0	21	43	45
23:00	0	1	0	2	3	5	5	2	0	0	0	0	0	0	18	44	46
Total	5	8	15	67	383	1234	761	109	15	3	0	0	0	0	2600		
Percent	0.2%	0.3%	0.6%	2.6%	14.7%	47.5%	29.3%	4.2%	0.6%	0.1%	0.0%	0.0%	0.0%	0.0%			
AM Peak	10:00	07:00	08:00	08:00	08:00	07:00	07:00	07:00	07:00						07:00		
Vol.	1	2	2	9	41	165	83	12	4						306		
PM Peak	12:00	14:00	14:00	14:00	18:00	17:00	16:00	16:00	14:00	12:00					17:00		
Vol.	2	2	2	9	30	95	55	9	1	1					177		

Hoskins Rd West of Old Barge Road
Simsbury, Connecticut

Connecticut Counts LLC
63 Sugar Maple Lane
Kensington, Connecticut 06037
(860) 828-1693

Site Code: 3643
Station ID:

Eastbound

Latitude: 0' 0.000 Undefined

Start Time	1 15	16 20	21 25	26 30	31 35	36 40	41 45	46 50	51 55	56 60	61 65	66 70	71 75	76 999	Total	85th Percent	95th Percent
06/20/15	0	0	0	0	2	4	2	1	0	0	0	0	0	0	9	39	40
01:00	0	0	0	0	0	4	2	0	0	0	0	0	0	0	6	40	40
02:00	0	0	0	0	1	1	1	0	0	0	0	0	0	0	3	*	*
03:00	0	0	0	1	0	0	2	1	0	0	0	0	0	0	4	*	*
04:00	0	0	0	0	1	1	0	0	0	0	0	0	0	0	2	*	*
05:00	0	0	0	0	2	6	5	4	0	0	0	0	0	0	17	46	48
06:00	0	0	0	0	7	24	22	5	**2**	0	0	0	0	0	60	45	49
07:00	0	0	0	2	11	40	35	1	1	0	0	0	0	0	90	43	45
08:00	0	0	1	1	32	79	40	3	0	0	0	0	0	0	156	42	44
09:00	0	0	0	3	42	96	**58**	8	0	0	0	0	0	0	207	43	45
10:00	0	0	**2**	**11**	**52**	**101**	37	6	1	0	0	0	0	0	**210**	41	44
11:00	0	0	0	3	35	83	48	**10**	1	0	0	0	0	0	180	43	46
12 PM	0	**2**	2	3	30	78	33	4	1	0	0	0	0	0	153	42	45
13:00	0	0	2	**9**	**39**	57	40	**10**	0	0	0	0	0	0	157	43	46
14:00	0	0	0	4	35	**81**	**42**	2	0	0	0	0	0	0	**164**	42	44
15:00	0	0	4	7	21	48	28	6	**2**	0	0	0	0	0	116	43	46
16:00	0	1	0	1	26	58	24	3	1	0	0	0	0	0	114	42	44
17:00	0	1	**5**	3	25	52	24	7	1	0	0	0	0	0	118	42	46
18:00	0	1	5	5	19	49	23	6	1	0	0	0	0	0	109	42	46
19:00	0	1	2	2	20	35	9	2	0	0	0	0	0	0	71	40	43
20:00	0	0	1	0	18	30	16	0	0	0	0	0	0	0	65	42	44
21:00	0	0	0	2	15	34	5	0	0	0	0	0	0	0	56	39	42
22:00	0	0	0	0	0	72	0	0	0	0	0	0	0	0	72	39	40
23:00	0	0	0	0	0	70	0	0	0	0	0	0	0	0	70	39	40
Total	0	6	24	57	433	1103	496	79	11	0	0	0	0	0	2209		
Percent	0.0%	0.3%	1.1%	2.6%	19.6%	49.9%	22.5%	3.6%	0.5%	0.0%	0.0%	0.0%	0.0%	0.0%			
AM Peak			10:00	10:00	10:00	10:00	09:00	11:00	06:00						10:00		
Vol.			2	11	52	101	58	10	2						210		
PM Peak		12:00	17:00	13:00	13:00	14:00	14:00	13:00	15:00						14:00		
Vol.		2	5	9	39	81	42	10	2						164		

Hoskins Rd West of Old Barge Road
Simsbury, Connecticut

Connecticut Counts LLC
63 Sugar Maple Lane
Kensington, Connecticut 06037
(860) 828-1693

Site Code: 3643
Station ID:

Eastbound

Latitude: 0' 0.000 Undefined

Start Time	1 15	16 20	21 25	26 30	31 35	36 40	41 45	46 50	51 55	56 60	61 65	66 70	71 75	76 999	Total	85th Percent	95th Percent
06/21/15	0	0	0	0	0	45	0	0	0	0	0	0	0	0	45	39	40
01:00	0	0	0	0	0	20	0	0	0	0	0	0	0	0	20	40	41
02:00	0	0	0	0	0	12	0	0	0	0	0	0	0	0	12	39	40
03:00	0	0	0	0	0	3	0	0	0	0	0	0	0	0	3	37	37
04:00	0	0	0	0	0	5	0	0	0	0	0	0	0	0	5	39	39
05:00	0	0	0	0	0	9	0	0	0	0	0	0	0	0	9	39	40
06:00	0	0	0	0	0	23	0	0	0	0	0	0	0	0	23	39	40
07:00	0	0	0	0	0	66	0	0	0	0	0	0	0	0	66	39	40
08:00	0	0	0	0	0	115	0	0	0	0	0	0	0	0	115	39	40
09:00	0	0	0	0	0	176	0	0	0	0	0	0	0	0	176	39	40
10:00	0	0	0	0	0	**183**	0	0	0	0	0	0	0	0	**183**	39	40
11:00	*	*	*	*	*	*	*	*	*	*	*	*	*	*	*	*	*
12 PM	*	*	*	*	*	*	*	*	*	*	*	*	*	*	*	*	*
13:00	*	*	*	*	*	*	*	*	*	*	*	*	*	*	*	*	*
14:00	*	*	*	*	*	*	*	*	*	*	*	*	*	*	*	*	*
15:00	*	*	*	*	*	*	*	*	*	*	*	*	*	*	*	*	*
16:00	*	*	*	*	*	*	*	*	*	*	*	*	*	*	*	*	*
17:00	*	*	*	*	*	*	*	*	*	*	*	*	*	*	*	*	*
18:00	*	*	*	*	*	*	*	*	*	*	*	*	*	*	*	*	*
19:00	*	*	*	*	*	*	*	*	*	*	*	*	*	*	*	*	*
20:00	*	*	*	*	*	*	*	*	*	*	*	*	*	*	*	*	*
21:00	*	*	*	*	*	*	*	*	*	*	*	*	*	*	*	*	*
22:00	*	*	*	*	*	*	*	*	*	*	*	*	*	*	*	*	*
23:00	*	*	*	*	*	*	*	*	*	*	*	*	*	*	*	*	*
Total	0	0	0	0	0	657	0	0	0	0	0	0	0	0	657		
Percent	0.0%	0.0%	0.0%	0.0%	0.0%	100.0%	0.0%	0.0%	0.0%	0.0%	0.0%	0.0%	0.0%	0.0%			
AM Peak Vol.						10:00 183									10:00 183		
PM Peak Vol.																	
Total	9	24	63	247	1545	4968	2466	385	38	5	0	2	0	0	9752		
Percent	0.1%	0.2%	0.6%	2.5%	15.8%	50.9%	25.3%	3.9%	0.4%	0.1%	0.0%	0.0%	0.0%	0.0%			

15th Percentile :	33 MPH
50th Percentile :	37 MPH
85th Percentile :	42 MPH
95th Percentile :	45 MPH

Stats

10 MPH Pace Speed :	34-43 MPH
Number in Pace :	7052
Percent in Pace :	72.3%
Number of Vehicles > 30 MPH :	9235
Percent of Vehicles > 30 MPH :	94.7%
Mean Speed(Average) :	38 MPH

Hoskins Rd West of Old Barge Road
Simsbury, Connecticut

Connecticut Counts LLC
63 Sugar Maple Lane
Kensington, Connecticut 06037
_(860) 828-1693_

Site Code: 3643
Station ID:

Latitude: 0' 0.000 Undefined

Westbound

Start Time	1 15	16 20	21 25	26 30	31 35	36 40	41 45	46 50	51 55	56 60	61 65	66 70	71 75	76 999	Total	85th Percent	95th Percent
06/17/15	*	*	*	*	*	*	*	*	*	*	*	*	*	*	*	*	*
01:00	*	*	*	*	*	*	*	*	*	*	*	*	*	*	*	*	*
02:00	*	*	*	*	*	*	*	*	*	*	*	*	*	*	*	*	*
03:00	*	*	*	*	*	*	*	*	*	*	*	*	*	*	*	*	*
04:00	*	*	*	*	*	*	*	*	*	*	*	*	*	*	*	*	*
05:00	*	*	*	*	*	*	*	*	*	*	*	*	*	*	*	*	*
06:00	*	*	*	*	*	*	*	*	*	*	*	*	*	*	*	*	*
07:00	*	*	*	*	*	*	*	*	*	*	*	*	*	*	*	*	*
08:00	*	*	*	*	*	*	*	*	*	*	*	*	*	*	*	*	*
09:00	0	0	**1**	7	28	45	9	2	0	0	0	0	0	0	92	40	43
10:00	**1**	0	1	**13**	**43**	**57**	12	**3**	**2**	0	0	0	0	0	**132**	40	44
11:00	1	0	0	9	42	39	**13**	1	1	0	0	0	0	0	106	40	43
12 PM	0	0	3	6	50	60	17	3	0	0	0	0	0	0	139	40	43
13:00	0	0	**10**	9	49	62	14	0	**1**	0	0	0	0	0	145	39	42
14:00	0	0	1	8	65	63	14	2	0	0	0	0	0	0	153	39	42
15:00	1	1	1	7	75	86	20	1	0	0	0	0	0	0	192	40	42
16:00	0	1	4	9	75	132	39	3	0	0	0	0	0	0	263	40	43
17:00	0	**2**	10	**27**	**104**	**153**	**42**	**12**	0	0	0	0	0	0	**350**	40	44
18:00	**2**	1	1	10	76	141	33	10	0	0	0	0	0	0	274	41	44
19:00	0	0	2	11	61	94	25	9	1	0	0	0	0	0	203	41	45
20:00	0	0	0	13	64	62	19	1	0	0	0	0	0	0	159	40	42
21:00	0	0	1	11	42	41	10	0	1	0	0	0	0	0	106	39	42
22:00	1	1	0	5	23	23	3	0	1	0	0	0	0	0	57	38	40
23:00	0	0	0	2	17	10	4	0	0	0	0	0	0	0	33	39	42
Total	6	6	35	147	814	1068	274	47	7	0	0	0	0	0	2404		
Percent	0.2%	0.2%	1.5%	6.1%	33.9%	44.4%	11.4%	2.0%	0.3%	0.0%	0.0%	0.0%	0.0%	0.0%			
AM Peak	10:00		09:00	10:00	10:00	10:00	11:00	10:00	10:00						10:00		
Vol.	1		1	13	43	57	13	3	2						132		
PM Peak	18:00	17:00	13:00	17:00	17:00	17:00	17:00	17:00	13:00						17:00		
Vol.	2	2	10	27	104	153	42	12	1						350		

Hoskins Rd West of Old Barge Road
Simsbury, Connecticut

Connecticut Counts LLC
63 Sugar Maple Lane
Kensington, Connecticut 06037
(860) 828-1693

Site Code: 3643
Station ID:

Latitude: 0' 0.000 Undefined

Westbound

Start Time	1 15	16 20	21 25	26 30	31 35	36 40	41 45	46 50	51 55	56 60	61 65	66 70	71 75	76 999	Total	85th Percent	95th Percent
06/18/15	0	0	0	0	2	5	1	1	0	0	0	0	0	0	9	39	40
01:00	0	0	0	2	1	5	3	0	0	0	0	0	0	0	11	41	42
02:00	0	0	0	0	1	1	1	0	0	0	0	0	0	0	3	*	*
03:00	**1**	0	0	0	0	0	0	0	0	0	0	0	0	0	1	*	*
04:00	0	0	0	1	0	0	2	0	0	0	0	0	0	0	3	*	*
05:00	0	0	0	1	1	5	1	0	**1**	0	0	0	0	0	9	39	40
06:00	0	0	0	4	9	22	7	0	0	0	0	0	0	0	42	40	43
07:00	0	**2**	1	3	25	40	8	0	0	0	0	0	0	0	79	40	42
08:00	1	2	**2**	6	**47**	36	6	1	0	0	0	0	0	0	101	39	41
09:00	0	0	1	8	34	41	**14**	**2**	0	0	0	0	0	0	100	40	43
10:00	0	0	1	**12**	38	**50**	10	0	0	0	0	0	0	0	**111**	39	42
11:00	1	0	2	12	44	46	5	0	0	0	0	0	0	0	110	38	41
12 PM	0	0	1	6	44	61	16	**5**	0	0	0	0	0	0	133	40	44
13:00	0	0	4	8	46	58	12	1	0	0	0	0	0	0	129	39	42
14:00	0	0	4	12	50	67	14	1	0	0	0	0	0	0	148	39	42
15:00	0	**2**	3	8	69	94	36	3	1	0	0	0	0	0	216	41	44
16:00	**2**	1	3	**24**	84	108	29	2	0	**1**	0	0	0	0	254	40	43
17:00	0	1	1	17	**124**	**178**	**46**	1	0	0	0	0	0	0	**368**	40	43
18:00	2	1	0	8	88	122	32	3	1	1	0	0	0	0	258	40	43
19:00	0	0	**5**	17	61	87	14	5	**2**	0	0	0	0	0	191	40	44
20:00	0	1	0	7	63	61	14	1	1	0	0	0	0	0	148	39	42
21:00	0	2	0	5	32	53	21	2	1	0	0	0	0	0	116	41	44
22:00	0	0	1	4	25	25	11	0	0	1	0	0	0	0	67	40	43
23:00	0	0	0	4	8	11	3	0	0	0	0	0	0	0	26	39	41
Total	7	12	29	169	896	1176	306	28	7	3	0	0	0	0	2633		
Percent	0.3%	0.5%	1.1%	6.4%	34.0%	44.7%	11.6%	1.1%	0.3%	0.1%	0.0%	0.0%	0.0%	0.0%			
AM Peak	03:00	07:00	08:00	10:00	08:00	10:00	09:00	09:00	05:00						10:00		
Vol.	1	2	2	12	47	50	14	2	1						111		
PM Peak	16:00	15:00	19:00	16:00	17:00	17:00	17:00	12:00	19:00	16:00					17:00		
Vol.	2	2	5	24	124	178	46	5	2	1					368		

Hoskins Rd West of Old Barge Road
Simsbury, Connecticut

Connecticut Counts LLC
63 Sugar Maple Lane
Kensington, Connecticut 06037
(860) 828-1693

Site Code: 3643
Station ID:

Latitude: 0' 0.000 Undefined

Westbound

Start Time	1 15	16 20	21 25	26 30	31 35	36 40	41 45	46 50	51 55	56 60	61 65	66 70	71 75	76 999	Total	85th Percent	95th Percent
06/19/15	0	0	0	0	3	6	1	1	0	0	0	0	0	0	11	39	40
01:00	0	0	0	4	4	7	1	0	0	0	0	0	0	0	16	38	40
02:00	0	0	0	0	1	4	2	0	0	0	0	0	0	0	7	40	40
03:00	0	0	0	1	0	2	0	0	0	0	0	0	0	0	3	*	*
04:00	0	0	1	0	0	1	0	0	0	0	0	0	0	0	2	*	*
05:00	0	0	0	0	0	2	1	0	0	0	0	0	0	0	3	*	*
06:00	0	0	0	1	11	13	0	1	**1**	0	0	0	0	0	27	39	40
07:00	0	0	1	7	25	26	5	0	0	0	0	0	0	0	64	39	41
08:00	0	0	1	6	35	38	10	0	0	0	0	0	0	0	90	39	42
09:00	0	0	2	8	46	35	**23**	1	0	0	0	0	0	0	115	41	44
10:00	0	0	0	**12**	30	**59**	11	1	1	**1**	0	0	**1**	0	116	40	42
11:00	**1**	**2**	**3**	4	**54**	46	19	**2**	1	0	0	0	1	0	**133**	40	43
12 PM	0	0	**10**	9	48	69	22	5	0	0	0	0	0	0	163	40	44
13:00	0	0	4	9	44	67	18	5	0	0	0	0	0	0	147	41	44
14:00	0	1	4	9	63	67	12	3	0	0	0	0	0	0	159	39	42
15:00	1	1	3	**20**	64	85	25	2	**1**	0	0	0	0	0	202	40	43
16:00	1	0	1	10	68	131	**43**	2	0	0	0	0	0	0	256	41	43
17:00	0	0	0	10	**114**	**160**	43	1	0	0	0	0	0	0	**328**	40	43
18:00	0	1	2	6	59	95	32	**6**	0	0	0	0	0	0	201	41	44
19:00	**2**	**2**	1	10	57	75	11	4	1	**1**	0	0	0	0	164	39	43
20:00	0	0	0	5	34	61	17	1	0	1	0	0	0	0	119	40	43
21:00	0	1	1	4	40	37	11	1	0	0	0	0	0	0	95	40	43
22:00	0	0	1	4	20	24	5	0	0	0	0	0	0	0	54	40	42
23:00	0	0	1	1	13	17	8	3	0	0	0	0	0	0	43	42	45
Total	5	8	36	140	833	1127	320	39	5	3	0	0	2	0	2518		
Percent	0.2%	0.3%	1.4%	5.6%	33.1%	44.8%	12.7%	1.5%	0.2%	0.1%	0.0%	0.0%	0.1%	0.0%			
AM Peak	11:00	11:00	11:00	10:00	11:00	10:00	09:00	11:00	06:00	10:00			10:00		11:00		
Vol.	1	2	3	12	54	59	23	2	1	1			1		133		
PM Peak	19:00	19:00	12:00	15:00	17:00	17:00	16:00	18:00	15:00	19:00					17:00		
Vol.	2	2	10	20	114	160	43	6	1	1					328		

Hoskins Rd West of Old Barge Road
Simsbury, Connecticut

Connecticut Counts LLC
63 Sugar Maple Lane
Kensington, Connecticut 06037
(860) 828-1693

Site Code: 3643
Station ID:

Latitude: 0' 0.000 Undefined

Westbound

Start Time	1 15	16 20	21 25	26 30	31 35	36 40	41 45	46 50	51 55	56 60	61 65	66 70	71 75	76 999	Total	85th Percent	95th Percent
06/20/15	0	0	1	2	12	13	0	1	0	0	0	0	0	0	29	38	40
01:00	0	0	0	2	6	6	4	0	0	0	0	0	0	0	18	41	43
02:00	0	0	0	2	2	6	6	0	0	0	0	0	0	0	16	43	44
03:00	0	0	0	1	0	2	2	0	0	0	0	0	0	0	5	*	*
04:00	0	0	0	0	1	0	2	0	0	0	0	0	0	0	3	*	*
05:00	0	0	0	1	0	2	0	0	0	0	0	0	0	0	3	*	*
06:00	0	0	0	0	6	4	1	**2**	0	0	0	0	0	0	13	38	39
07:00	0	0	0	4	15	16	5	1	0	0	0	0	0	0	41	40	44
08:00	1	0	**2**	5	27	38	9	0	0	0	0	0	0	0	82	40	42
09:00	0	0	0	15	34	53	16	0	0	0	0	0	0	0	118	40	43
10:00	**3**	1	0	**16**	**55**	68	19	2	0	0	0	0	0	0	**164**	40	42
11:00	1	**4**	0	6	53	**71**	**22**	0	**1**	0	0	0	0	0	158	40	43
12 PM	0	**2**	2	**23**	68	**79**	18	3	1	0	0	0	0	0	**196**	39	43
13:00	0	2	0	12	51	62	11	4	1	0	0	0	0	0	143	40	44
14:00	0	0	0	13	**70**	63	20	2	**2**	0	0	0	0	0	170	40	43
15:00	0	1	**4**	14	49	61	**26**	**5**	1	0	0	0	0	0	161	41	45
16:00	**1**	0	3	13	38	66	19	0	0	0	0	0	0	0	140	40	43
17:00	0	0	2	8	49	73	26	1	0	0	0	0	0	0	159	40	43
18:00	0	1	1	13	34	59	16	1	0	0	0	0	0	0	125	40	43
19:00	0	0	3	13	24	45	15	4	0	0	0	0	0	0	104	41	44
20:00	1	2	1	9	31	40	5	1	0	0	0	0	0	0	90	39	41
21:00	0	0	0	3	26	31	6	0	0	0	0	0	0	0	66	39	41
22:00	0	0	0	0	0	0	0	0	0	0	0	0	0	0	0	*	*
23:00	0	0	0	0	0	0	0	0	0	0	0	0	0	0	0	*	*
Total	7	13	19	175	651	858	248	27	6	0	0	0	0	0	2004		
Percent	0.3%	0.6%	0.9%	8.7%	32.5%	42.8%	12.4%	1.3%	0.3%	0.0%	0.0%	0.0%	0.0%	0.0%			
AM Peak	10:00	11:00	08:00	10:00	10:00	11:00	11:00	06:00	11:00						10:00		
Vol.	3	4	2	16	55	71	22	2	1						164		
PM Peak	16:00	12:00	15:00	12:00	14:00	12:00	15:00	15:00	14:00						12:00		
Vol.	1	2	4	23	70	79	26	5	2						196		

Hoskins Rd West of Old Barge Road
Simsbury, Connecticut

Connecticut Counts LLC
63 Sugar Maple Lane
Kensington, Connecticut 06037
(860) 828-1693

Site Code: 3643
Station ID:

Latitude: 0' 0.000 Undefined

Westbound

Start Time	1 15	16 20	21 25	26 30	31 35	36 40	41 45	46 50	51 55	56 60	61 65	66 70	71 75	76 999	Total	85th Percent	95th Percent
06/21/15	0	0	0	0	0	0	0	0	0	0	0	0	0	0	0	*	*
01:00	0	0	0	0	0	0	0	0	0	0	0	0	0	0	0	*	*
02:00	0	0	0	0	0	0	0	0	0	0	0	0	0	0	0	*	*
03:00	0	0	0	0	0	0	0	0	0	0	0	0	0	0	0	*	*
04:00	0	0	0	0	0	0	0	0	0	0	0	0	0	0	0	*	*
05:00	0	0	0	0	0	0	0	0	0	0	0	0	0	0	0	*	*
06:00	0	0	0	0	0	0	0	0	0	0	0	0	0	0	0	*	*
07:00	0	0	0	0	0	0	0	0	0	0	0	0	0	0	0	*	*
08:00	0	0	0	0	0	1	0	0	0	0	0	0	0	0	1	*	*
09:00	0	0	0	0	0	0	0	0	0	0	0	0	0	0	0	*	*
10:00	0	0	0	0	0	1	0	0	0	0	0	0	0	0	1	*	*
11:00	*	*	*	*	*	*	*	*	*	*	*	*	*	*	*	*	*
12 PM	*	*	*	*	*	*	*	*	*	*	*	*	*	*	*	*	*
13:00	*	*	*	*	*	*	*	*	*	*	*	*	*	*	*	*	*
14:00	*	*	*	*	*	*	*	*	*	*	*	*	*	*	*	*	*
15:00	*	*	*	*	*	*	*	*	*	*	*	*	*	*	*	*	*
16:00	*	*	*	*	*	*	*	*	*	*	*	*	*	*	*	*	*
17:00	*	*	*	*	*	*	*	*	*	*	*	*	*	*	*	*	*
18:00	*	*	*	*	*	*	*	*	*	*	*	*	*	*	*	*	*
19:00	*	*	*	*	*	*	*	*	*	*	*	*	*	*	*	*	*
20:00	*	*	*	*	*	*	*	*	*	*	*	*	*	*	*	*	*
21:00	*	*	*	*	*	*	*	*	*	*	*	*	*	*	*	*	*
22:00	*	*	*	*	*	*	*	*	*	*	*	*	*	*	*	*	*
23:00	*	*	*	*	*	*	*	*	*	*	*	*	*	*	*	*	*
Total	0	0	0	0	0	2	0	0	0	0	0	0	0	0	2		
Percent	0.0%	0.0%	0.0%	0.0%	0.0%	100.0%	0.0%	0.0%	0.0%	0.0%	0.0%	0.0%	0.0%	0.0%			
AM Peak Vol.						08:00 1									08:00 1		
PM Peak Vol.																	
Total	25	39	119	631	3194	4231	1148	141	25	6	0	0	2	0	9561		
Percent	0.3%	0.4%	1.2%	6.6%	33.4%	44.3%	12.0%	1.5%	0.3%	0.1%	0.0%	0.0%	0.0%	0.0%			

15th Percentile :	30 MPH
50th Percentile :	35 MPH
85th Percentile :	40 MPH
95th Percentile :	43 MPH

Stats

10 MPH Pace Speed :	32-41 MPH
Number in Pace :	6763
Percent in Pace :	70.7%
Number of Vehicles > 30 MPH :	8405
Percent of Vehicles > 30 MPH :	87.9%
Mean Speed(Average) :	36 MPH

APPENDIX E:
Explanation of Operational Analysis

EXPLANATION OF INTERSECTION ANALYSIS METHODOLOGIES

Operational analyses of the study intersections was completed using procedures in the Transportation Research Board's *Highway Capacity Manual (HCM), 2010*. This is the usual methodology for the analysis of traffic conditions. The software program *Synchro 9* by TrafficWare (a nationally recognized computer software package for analyzing capacities, Levels of Service, and queueing) was used to perform the actual capacity and queue analyses.

Operating conditions at intersections are evaluated in terms of Levels of Service (LOS). LOS are letter grades, LOS A being the best and LOS F being the worst, quantified by average control delay. Control delay includes the amount of time a driver experiences stopped at the intersection, as well as, start-up lost time, and time moving up in the queue at the intersection.

For signalized intersections, the LOS is reported for the entire intersection, as well as, for each approach and individual movements. The HCM LOS criteria for signalized intersections is summarized below:

HCM Signalized Intersection LOS Criteria	
LOS	Control Delay (seconds per vehicle)
A	≤ 10
B	> 10 and ≤ 20
C	> 20 and ≤ 35
D	> 35 and ≤ 55
E	> 55 and ≤ 80
F	> 80

LOS A through D are generally considered to be adequate peak hour operations at a signalized intersection. LOS E and F are typically incurred when one or more movements at the intersection are operating over capacity.

For two-way STOP controlled unsignalized intersections, the LOS is evaluated for the minor street approach(es) and for the left turns from the major street. The major street through and right turning traffic is assumed to have no delay since the movement is free-flow with no traffic control. At all-way STOP controlled intersections, LOS is reported similar to signalized intersections. That is, for the intersection as a whole, as well as for each approach and individual movements.

The HCM LOS criteria for unsignalized intersections is summarized below:

HCM Unsignalized Intersection LOS Criteria	
LOS	Control Delay (seconds per vehicle)
A	≤ 10
B	> 10 and ≤ 15
C	> 15 and ≤ 25
D	> 25 and ≤ 35
E	> 35 and ≤ 50
F	> 50

Inadequate Levels of Service for minor street approaches to unsignalized intersections is not uncommon, as the major street traffic flow is continuous.

Synchro output also includes 50th percentile (or average) queue lengths, as well as, 95th percentile queues (occurring 5 percent of the time or less). Calculations for these queues take into account rate of arriving vehicles, red time (at signalized intersections), saturation flow rate, lane arrangement and lane usage. The 95th percentile queue is the queue length that would be experienced by 5 percent of stopped vehicles at non-signalized intersections, or during 5 percent of signal cycles at a signalized intersection. The 95th percentile queue is often used to determine storage needs for auxiliary lanes, while the 50th percentile queue is more representative of what the average motorist will experience.

APPENDIX F:
Operational Analysis:

Year 2015 Existing Conditions

Movement	EBL	EBR	NBL	NBT	SBT	SBR
Lane Configurations						
Volume (veh/h)	36	274	60	382	578	10
Number	7	14	5	2	6	16
Initial Q (Qb), veh	0	0	0	0	0	0
Ped-Bike Adj(A_pbT)	1.00	1.00	1.00			1.00
Parking Bus, Adj	1.00	1.00	1.00	1.00	1.00	1.00
Adj Sat Flow, veh/h/ln	1863	1863	1863	1863	1863	1900
Adj Flow Rate, veh/h	39	298	65	415	628	11
Adj No. of Lanes	1	1	1	1	1	0
Peak Hour Factor	0.92	0.92	0.92	0.92	0.92	0.92
Percent Heavy Veh, %	2	2	2	2	2	2
Cap, veh/h	359	405	480	1279	1092	19
Arrive On Green	0.20	0.20	0.05	0.69	0.60	0.60
Sat Flow, veh/h	1774	1583	1774	1863	1825	32
Grp Volume(v), veh/h	39	298	65	415	0	639
Grp Sat Flow(s),veh/h/ln	1774	1583	1774	1863	0	1857
Q Serve(g_s), s	1.6	15.5	1.1	8.1	0.0	19.0
Cycle Q Clear(g_c), s	1.6	15.5	1.1	8.1	0.0	19.0
Prop In Lane	1.00	1.00	1.00			0.02
Lane Grp Cap(c), veh/h	359	405	480	1279	0	1111
V/C Ratio(X)	0.11	0.74	0.14	0.32	0.00	0.57
Avail Cap(c_a), veh/h	493	525	582	1279	0	1111
HCM Platoon Ratio	1.00	1.00	1.00	1.00	1.00	1.00
Upstream Filter(I)	1.00	1.00	1.00	1.00	0.00	1.00
Uniform Delay (d), s/veh	29.3	30.7	7.6	5.7	0.0	11.1
Incr Delay (d2), s/veh	0.1	3.9	0.1	0.7	0.0	2.2
Initial Q Delay(d3),s/veh	0.0	0.0	0.0	0.0	0.0	0.0
%ile BackOfQ(50%),veh/ln	0.8	13.3	0.6	4.4	0.0	10.3
LnGrp Delay(d),s/veh	29.4	34.5	7.7	6.4	0.0	13.2
LnGrp LOS	C	C	A	A		B
Approach Vol, veh/h	337			480	639	
Approach Delay, s/veh	33.9			6.6	13.2	
Approach LOS	C			A	B	

Timer	1	2	3	4	5	6	7	8
Assigned Phs		2		4	5	6		
Phs Duration (G+Y+Rc), s		68.3		21.7	7.9	60.4		
Change Period (Y+Rc), s		* 6.5		3.5	* 3.1	* 6.5		
Max Green Setting (Gmax), s		* 55		25.0	* 10	* 42		
Max Q Clear Time (g_c+I1), s		10.1		17.5	3.1	21.0		
Green Ext Time (p_c), s		8.0		0.7	0.1	6.7		

Intersection Summary	
HCM 2010 Ctrl Delay	15.8
HCM 2010 LOS	B

Notes

* HCM 2010 computational engine requires equal clearance times for the phases crossing the barrier.

Lane Group	EBL	EBR	NBL	NBT	SBT
Lane Group Flow (vph)	39	298	65	415	639
v/c Ratio	0.22	0.71	0.10	0.26	0.50
Control Delay	40.4	21.7	1.7	2.5	8.7
Queue Delay	0.0	0.0	0.0	0.0	0.0
Total Delay	40.4	21.7	1.7	2.5	8.7
Queue Length 50th (ft)	21	55	5	49	153
Queue Length 95th (ft)	51	127	11	81	301
Internal Link Dist (ft)	770			717	290
Turn Bay Length (ft)		250	150		
Base Capacity (vph)	475	457	655	1568	1290
Starvation Cap Reductn	0	0	0	0	0
Spillback Cap Reductn	0	0	0	0	0
Storage Cap Reductn	0	0	0	0	0
Reduced v/c Ratio	0.08	0.65	0.10	0.26	0.50

Intersection Summary

Intersection	
Int Delay, s/veh	3.2

Movement	EBL	EBR	NBL	NBT	SBT	SBR
Vol, veh/h	87	49	10	391	542	32
Conflicting Peds, #/hr	0	0	0	0	0	0
Sign Control	Stop	Stop	Free	Free	Free	Free
RT Channelized	-	None	-	None	-	None
Storage Length	0	-	-	-	-	-
Veh in Median Storage, #	0	-	-	0	0	-
Grade, %	0	-	-	0	0	-
Peak Hour Factor	95	95	95	95	95	95
Heavy Vehicles, %	2	2	2	2	2	2
Mvmt Flow	92	52	11	412	571	34

Major/Minor	Minor2		Major1		Major2	
Conflicting Flow All	1020	587	604	0	-	0
Stage 1	587	-	-	-	-	-
Stage 2	433	-	-	-	-	-
Critical Hdwy	6.42	6.22	4.12	-	-	-
Critical Hdwy Stg 1	5.42	-	-	-	-	-
Critical Hdwy Stg 2	5.42	-	-	-	-	-
Follow-up Hdwy	3.518	3.318	2.218	-	-	-
Pot Cap-1 Maneuver	262	510	974	-	-	-
Stage 1	556	-	-	-	-	-
Stage 2	654	-	-	-	-	-
Platoon blocked, %				-	-	-
Mov Cap-1 Maneuver	258	510	974	-	-	-
Mov Cap-2 Maneuver	258	-	-	-	-	-
Stage 1	556	-	-	-	-	-
Stage 2	644	-	-	-	-	-

Approach	EB	NB	SB
HCM Control Delay, s	25.7	0.2	0
HCM LOS	D		

Minor Lane/Major Mvmt	NBL	NBT	EBLn1	SBT	SBR
Capacity (veh/h)	974	-	314	-	-
HCM Lane V/C Ratio	0.011	-	0.456	-	-
HCM Control Delay (s)	8.7	0	25.7	-	-
HCM Lane LOS	A	A	D	-	-
HCM 95th %tile Q(veh)	0	-	2.3	-	-

Intersection	
Int Delay, s/veh	2.5

Movement	EBL	EBT	WBT	WBR	SBL	SBR
Vol, veh/h	99	301	70	1	1	62
Conflicting Peds, #/hr	0	0	0	0	0	0
Sign Control	Free	Free	Free	Free	Stop	Stop
RT Channelized	-	None	-	None	-	None
Storage Length	-	-	-	-	-	0
Veh in Median Storage, #	-	0	0	-	0	-
Grade, %	-	0	0	-	0	-
Peak Hour Factor	88	88	88	88	88	88
Heavy Vehicles, %	0	2	2	0	0	2
Mvmt Flow	112	342	80	1	1	70

Major/Minor	Major1		Major2		Minor2	
Conflicting Flow All	81	0	-	0	647	80
Stage 1	-	-	-	-	80	-
Stage 2	-	-	-	-	567	-
Critical Hdwy	4.1	-	-	-	6.4	6.22
Critical Hdwy Stg 1	-	-	-	-	5.4	-
Critical Hdwy Stg 2	-	-	-	-	5.4	-
Follow-up Hdwy	2.2	-	-	-	3.5	3.318
Pot Cap-1 Maneuver	1529	-	-	-	439	980
Stage 1	-	-	-	-	948	-
Stage 2	-	-	-	-	572	-
Platoon blocked, %		-	-	-		
Mov Cap-1 Maneuver	1529	-	-	-	399	980
Mov Cap-2 Maneuver	-	-	-	-	399	-
Stage 1	-	-	-	-	948	-
Stage 2	-	-	-	-	520	-

Approach	EB	WB	SB
HCM Control Delay, s	1.9	0	9
HCM LOS			A

Minor Lane/Major Mvmt	EBL	EBT	WBT	WBR	SBLn1
Capacity (veh/h)	1529	-	-	-	980
HCM Lane V/C Ratio	0.074	-	-	-	0.072
HCM Control Delay (s)	7.5	0	-	-	9
HCM Lane LOS	A	A	-	-	A
HCM 95th %tile Q(veh)	0.2	-	-	-	0.2

Intersection	
Intersection Delay, s/veh	10.8
Intersection LOS	B

Movement	EBU	EBL	EBT	WBU	WBT	WBR	SBU	SBL	SBR
Vol, veh/h	0	99	301	0	70	1	0	1	62
Peak Hour Factor	0.92	0.88	0.88	0.92	0.88	0.88	0.92	0.88	0.88
Heavy Vehicles, %	2	0	2	2	2	0	2	0	2
Mvmt Flow	0	112	342	0	80	1	0	1	70
Number of Lanes	0	0	1	0	1	0	0	0	1

Approach	EB	WB	SB
Opposing Approach	WB	EB	
Opposing Lanes	1	1	0
Conflicting Approach Left	SB		WB
Conflicting Lanes Left	1	0	1
Conflicting Approach Right		SB	EB
Conflicting Lanes Right	0	1	1
HCM Control Delay	11.7	8.1	7.9
HCM LOS	B	A	A

Lane	EBLn1	WBLn1	SBLn1
Vol Left, %	25%	0%	2%
Vol Thru, %	75%	99%	0%
Vol Right, %	0%	1%	98%
Sign Control	Stop	Stop	Stop
Traffic Vol by Lane	400	71	63
LT Vol	99	0	1
Through Vol	301	70	0
RT Vol	0	1	62
Lane Flow Rate	455	81	72
Geometry Grp	1	1	1
Degree of Util (X)	0.522	0.102	0.089
Departure Headway (Hd)	4.138	4.545	4.485
Convergence, Y/N	Yes	Yes	Yes
Cap	859	791	803
Service Time	2.214	2.556	2.489
HCM Lane V/C Ratio	0.53	0.102	0.09
HCM Control Delay	11.7	8.1	7.9
HCM Lane LOS	B	A	A
HCM 95th-tile Q	3.1	0.3	0.3

Intersection	
Int Delay, s/veh	0.3

Movement	EBT	EBR	WBL	WBT	NBL	NBR
Vol, veh/h	389	1	3	129	1	10
Conflicting Peds, #/hr	0	0	0	0	0	0
Sign Control	Free	Free	Free	Free	Stop	Stop
RT Channelized	-	None	-	None	-	None
Storage Length	-	-	-	-	0	-
Veh in Median Storage, #	0	-	-	0	0	-
Grade, %	0	-	-	0	0	-
Peak Hour Factor	93	93	93	93	93	93
Heavy Vehicles, %	2	0	0	2	0	0
Mvmt Flow	418	1	3	139	1	11

Major/Minor	Major1		Major2		Minor1	
Conflicting Flow All	0	0	419	0	564	419
Stage 1	-	-	-	-	419	-
Stage 2	-	-	-	-	145	-
Critical Hdwy	-	-	4.1	-	6.4	6.2
Critical Hdwy Stg 1	-	-	-	-	5.4	-
Critical Hdwy Stg 2	-	-	-	-	5.4	-
Follow-up Hdwy	-	-	2.2	-	3.5	3.3
Pot Cap-1 Maneuver	-	-	1151	-	490	638
Stage 1	-	-	-	-	668	-
Stage 2	-	-	-	-	887	-
Platoon blocked, %	-	-		-		
Mov Cap-1 Maneuver	-	-	1151	-	489	638
Mov Cap-2 Maneuver	-	-	-	-	489	-
Stage 1	-	-	-	-	668	-
Stage 2	-	-	-	-	884	-

Approach	EB	WB	NB
HCM Control Delay, s	0	0.2	10.9
HCM LOS			B

Minor Lane/Major Mvmt	NBLn1	EBT	EBR	WBL	WBT
Capacity (veh/h)	621	-	-	1151	-
HCM Lane V/C Ratio	0.019	-	-	0.003	-
HCM Control Delay (s)	10.9	-	-	8.1	0
HCM Lane LOS	B	-	-	A	A
HCM 95th %tile Q(veh)	0.1	-	-	0	-

Movement	EBL	EBR	NBL	NBT	SBT	SBR
Lane Configurations						
Volume (veh/h)	33	106	281	596	459	16
Number	7	14	5	2	6	16
Initial Q (Qb), veh	0	0	0	0	0	0
Ped-Bike Adj(A_pbT)	1.00	1.00	1.00			1.00
Parking Bus, Adj	1.00	1.00	1.00	1.00	1.00	1.00
Adj Sat Flow, veh/h/ln	1863	1863	1863	1863	1863	1900
Adj Flow Rate, veh/h	34	108	287	608	468	16
Adj No. of Lanes	1	1	1	1	1	0
Peak Hour Factor	0.98	0.98	0.98	0.98	0.98	0.98
Percent Heavy Veh, %	2	2	2	2	2	2
Cap, veh/h	223	343	669	1348	1050	36
Arrive On Green	0.13	0.13	0.09	0.72	0.59	0.59
Sat Flow, veh/h	1774	1583	1774	1863	1791	61
Grp Volume(v), veh/h	34	108	287	608	0	484
Grp Sat Flow(s),veh/h/ln	1774	1583	1774	1863	0	1852
Q Serve(g_s), s	1.1	3.8	3.8	8.9	0.0	9.7
Cycle Q Clear(g_c), s	1.1	3.8	3.8	8.9	0.0	9.7
Prop In Lane	1.00	1.00	1.00			0.03
Lane Grp Cap(c), veh/h	223	343	669	1348	0	1085
V/C Ratio(X)	0.15	0.31	0.43	0.45	0.00	0.45
Avail Cap(c_a), veh/h	667	740	774	1348	0	1085
HCM Platoon Ratio	1.00	1.00	1.00	1.00	1.00	1.00
Upstream Filter(I)	1.00	1.00	1.00	1.00	0.00	1.00
Uniform Delay (d), s/veh	25.9	21.9	4.9	3.8	0.0	7.7
Incr Delay (d2), s/veh	0.3	0.5	0.4	1.1	0.0	1.3
Initial Q Delay(d3),s/veh	0.0	0.0	0.0	0.0	0.0	0.0
%ile BackOfQ(50%),veh/ln	0.6	3.6	1.8	4.8	0.0	5.4
LnGrp Delay(d),s/veh	26.2	22.4	5.3	4.9	0.0	9.0
LnGrp LOS	C	C	A	A		A
Approach Vol, veh/h	142			895	484	
Approach Delay, s/veh	23.3			5.0	9.0	
Approach LOS	C			A	A	

Timer	1	2	3	4	5	6	7	8
Assigned Phs		2		4	5	6		
Phs Duration (G+Y+Rc), s		54.6		11.8	9.2	45.4		
Change Period (Y+Rc), s		* 6.5		3.5	* 3.1	* 6.5		
Max Green Setting (Gmax), s		* 48		25.0	* 10	* 35		
Max Q Clear Time (g_c+I1), s		10.9		5.8	5.8	11.7		
Green Ext Time (p_c), s		8.1		0.4	0.3	7.2		

Intersection Summary	
HCM 2010 Ctrl Delay	8.0
HCM 2010 LOS	A

Notes

* HCM 2010 computational engine requires equal clearance times for the phases crossing the barrier.

Lane Group	EBL	EBR	NBL	NBT	SBT
Lane Group Flow (vph)	34	108	287	608	484
v/c Ratio	0.13	0.28	0.38	0.38	0.42
Control Delay	25.7	5.9	2.8	3.1	8.7
Queue Delay	0.0	0.0	0.0	0.0	0.0
Total Delay	25.7	5.9	2.8	3.1	8.7
Queue Length 50th (ft)	10	0	0	0	44
Queue Length 95th (ft)	36	29	40	135	195
Internal Link Dist (ft)	770			717	290
Turn Bay Length (ft)		250	150		
Base Capacity (vph)	725	455	798	1597	1145
Starvation Cap Reductn	0	0	0	0	0
Spillback Cap Reductn	0	0	0	0	0
Storage Cap Reductn	0	0	0	0	0
Reduced v/c Ratio	0.05	0.24	0.36	0.38	0.42

Intersection Summary

Intersection	
Int Delay, s/veh	1.1

Movement	EBL	EBR	NBL	NBT	SBT	SBR
Vol, veh/h	32	17	26	579	468	125
Conflicting Peds, #/hr	0	0	0	0	0	0
Sign Control	Stop	Stop	Free	Free	Free	Free
RT Channelized	-	None	-	None	-	None
Storage Length	0	-	-	-	-	-
Veh in Median Storage, #	0	-	-	0	0	-
Grade, %	0	-	-	0	0	-
Peak Hour Factor	95	95	95	95	95	95
Heavy Vehicles, %	2	2	2	2	2	2
Mvmt Flow	34	18	27	609	493	132

Major/Minor	Minor2		Major1		Major2	
Conflicting Flow All	1222	558	624	0	-	0
Stage 1	558	-	-	-	-	-
Stage 2	664	-	-	-	-	-
Critical Hdwy	6.42	6.22	4.12	-	-	-
Critical Hdwy Stg 1	5.42	-	-	-	-	-
Critical Hdwy Stg 2	5.42	-	-	-	-	-
Follow-up Hdwy	3.518	3.318	2.218	-	-	-
Pot Cap-1 Maneuver	198	529	957	-	-	-
Stage 1	573	-	-	-	-	-
Stage 2	512	-	-	-	-	-
Platoon blocked, %				-	-	-
Mov Cap-1 Maneuver	189	529	957	-	-	-
Mov Cap-2 Maneuver	189	-	-	-	-	-
Stage 1	573	-	-	-	-	-
Stage 2	490	-	-	-	-	-

Approach	EB	NB	SB
HCM Control Delay, s	23.8	0.4	0
HCM LOS	C		

Minor Lane/Major Mvmt	NBL	NBT	EBLn1	SBT	SBR
Capacity (veh/h)	957	-	243	-	-
HCM Lane V/C Ratio	0.029	-	0.212	-	-
HCM Control Delay (s)	8.9	0	23.8	-	-
HCM Lane LOS	A	A	C	-	-
HCM 95th %tile Q(veh)	0.1	-	0.8	-	-

Intersection	
Int Delay, s/veh	3

Movement	EBL	EBT	WBT	WBR	SBL	SBR
Vol, veh/h	38	123	268	1	1	125
Conflicting Peds, #/hr	0	0	0	0	0	0
Sign Control	Free	Free	Free	Free	Stop	Stop
RT Channelized	-	None	-	None	-	None
Storage Length	-	-	-	-	-	0
Veh in Median Storage, #	-	0	0	-	0	-
Grade, %	-	0	0	-	0	-
Peak Hour Factor	93	93	93	93	93	93
Heavy Vehicles, %	0	2	2	0	0	2
Mvmt Flow	41	132	288	1	1	134

Major/Minor	Major1		Major2		Minor2	
Conflicting Flow All	289	0	-	0	503	289
Stage 1	-	-	-	-	289	-
Stage 2	-	-	-	-	214	-
Critical Hdwy	4.1	-	-	-	6.4	6.22
Critical Hdwy Stg 1	-	-	-	-	5.4	-
Critical Hdwy Stg 2	-	-	-	-	5.4	-
Follow-up Hdwy	2.2	-	-	-	3.5	3.318
Pot Cap-1 Maneuver	1284	-	-	-	532	750
Stage 1	-	-	-	-	765	-
Stage 2	-	-	-	-	826	-
Platoon blocked, %		-	-	-		
Mov Cap-1 Maneuver	1284	-	-	-	514	750
Mov Cap-2 Maneuver	-	-	-	-	514	-
Stage 1	-	-	-	-	765	-
Stage 2	-	-	-	-	798	-

Approach	EB	WB	SB
HCM Control Delay, s	1.9	0	10.8
HCM LOS			B

Minor Lane/Major Mvmt	EBL	EBT	WBT	WBR	SBLn1
Capacity (veh/h)	1284	-	-	-	750
HCM Lane V/C Ratio	0.032	-	-	-	0.179
HCM Control Delay (s)	7.9	0	-	-	10.8
HCM Lane LOS	A	A	-	-	B
HCM 95th %tile Q(veh)	0.1	-	-	-	0.7

Intersection	
Intersection Delay, s/veh	9.2
Intersection LOS	A

Movement	EBU	EBL	EBT	WBU	WBT	WBR	SBU	SBL	SBR
Vol, veh/h	0	38	123	0	268	1	0	1	125
Peak Hour Factor	0.92	0.93	0.93	0.92	0.93	0.93	0.92	0.93	0.93
Heavy Vehicles, %	2	0	2	2	2	0	2	0	2
Mvmt Flow	0	41	132	0	288	1	0	1	134
Number of Lanes	0	0	1	0	1	0	0	0	1

Approach	EB	WB	SB
Opposing Approach	WB	EB	
Opposing Lanes	1	1	0
Conflicting Approach Left	SB		WB
Conflicting Lanes Left	1	0	1
Conflicting Approach Right		SB	EB
Conflicting Lanes Right	0	1	1
HCM Control Delay	8.9	9.9	8.2
HCM LOS	A	A	A

Lane	EBLn1	WBLn1	SBLn1
Vol Left, %	24%	0%	1%
Vol Thru, %	76%	100%	0%
Vol Right, %	0%	0%	99%
Sign Control	Stop	Stop	Stop
Traffic Vol by Lane	161	269	126
LT Vol	38	0	1
Through Vol	123	268	0
RT Vol	0	1	125
Lane Flow Rate	173	289	135
Geometry Grp	1	1	1
Degree of Util (X)	0.219	0.355	0.163
Departure Headway (Hd)	4.56	4.424	4.341
Convergence, Y/N	Yes	Yes	Yes
Cap	788	813	826
Service Time	2.589	2.451	2.369
HCM Lane V/C Ratio	0.22	0.355	0.163
HCM Control Delay	8.9	9.9	8.2
HCM Lane LOS	A	A	A
HCM 95th-tile Q	0.8	1.6	0.6

Intersection	
Int Delay, s/veh	0.3

Movement	EBT	EBR	WBL	WBT	NBL	NBR
Vol, veh/h	156	1	11	382	3	5
Conflicting Peds, #/hr	0	0	0	0	0	0
Sign Control	Free	Free	Free	Free	Stop	Stop
RT Channelized	-	None	-	None	-	None
Storage Length	-	-	-	-	0	-
Veh in Median Storage, #	0	-	-	0	0	-
Grade, %	0	-	-	0	0	-
Peak Hour Factor	90	90	90	90	90	90
Heavy Vehicles, %	2	0	0	2	0	0
Mvmt Flow	173	1	12	424	3	6

Major/Minor	Major1		Major2		Minor1	
Conflicting Flow All	0	0	174	0	623	174
Stage 1	-	-	-	-	174	-
Stage 2	-	-	-	-	449	-
Critical Hdwy	-	-	4.1	-	6.4	6.2
Critical Hdwy Stg 1	-	-	-	-	5.4	-
Critical Hdwy Stg 2	-	-	-	-	5.4	-
Follow-up Hdwy	-	-	2.2	-	3.5	3.3
Pot Cap-1 Maneuver	-	-	1415	-	453	875
Stage 1	-	-	-	-	861	-
Stage 2	-	-	-	-	647	-
Platoon blocked, %	-	-		-		
Mov Cap-1 Maneuver	-	-	1415	-	448	875
Mov Cap-2 Maneuver	-	-	-	-	448	-
Stage 1	-	-	-	-	861	-
Stage 2	-	-	-	-	640	-

Approach	EB	WB	NB
HCM Control Delay, s	0	0.2	10.7
HCM LOS			B

Minor Lane/Major Mvmt	NBLn1	EBT	EBR	WBL	WBT
Capacity (veh/h)	645	-	-	1415	-
HCM Lane V/C Ratio	0.014	-	-	0.009	-
HCM Control Delay (s)	10.7	-	-	7.6	0
HCM Lane LOS	B	-	-	A	A
HCM 95th %tile Q(veh)	0	-	-	0	-

Year 2018 No Build Conditions

Movement	EBL	EBR	NBL	NBT	SBT	SBR
Lane Configurations						
Volume (veh/h)	103	291	64	563	742	11
Number	7	14	5	2	6	16
Initial Q (Qb), veh	0	0	0	0	0	0
Ped-Bike Adj(A_pbT)	1.00	1.00	1.00			1.00
Parking Bus, Adj	1.00	1.00	1.00	1.00	1.00	1.00
Adj Sat Flow, veh/h/ln	1863	1863	1863	1863	1863	1900
Adj Flow Rate, veh/h	112	316	70	612	807	12
Adj No. of Lanes	1	1	1	1	1	0
Peak Hour Factor	0.92	0.92	0.92	0.92	0.92	0.92
Percent Heavy Veh, %	2	2	2	2	2	2
Cap, veh/h	380	426	350	1257	1072	16
Arrive On Green	0.21	0.21	0.06	0.67	0.59	0.59
Sat Flow, veh/h	1774	1583	1774	1863	1831	27
Grp Volume(v), veh/h	112	316	70	612	0	819
Grp Sat Flow(s),veh/h/ln	1774	1583	1774	1863	0	1858
Q Serve(g_s), s	4.8	16.4	1.2	14.3	0.0	29.4
Cycle Q Clear(g_c), s	4.8	16.4	1.2	14.3	0.0	29.4
Prop In Lane	1.00	1.00	1.00			0.01
Lane Grp Cap(c), veh/h	380	426	350	1257	0	1088
V/C Ratio(X)	0.30	0.74	0.20	0.49	0.00	0.75
Avail Cap(c_a), veh/h	493	527	449	1257	0	1088
HCM Platoon Ratio	1.00	1.00	1.00	1.00	1.00	1.00
Upstream Filter(I)	1.00	1.00	1.00	1.00	0.00	1.00
Uniform Delay (d), s/veh	29.7	30.0	11.5	7.1	0.0	13.8
Incr Delay (d2), s/veh	0.4	4.4	0.3	1.3	0.0	4.8
Initial Q Delay(d3),s/veh	0.0	0.0	0.0	0.0	0.0	0.0
%ile BackOfQ(50%),veh/ln	2.4	14.1	0.7	7.8	0.0	16.5
LnGrp Delay(d),s/veh	30.1	34.4	11.7	8.4	0.0	18.7
LnGrp LOS	C	C	B	A		B
Approach Vol, veh/h	428			682	819	
Approach Delay, s/veh	33.3			8.8	18.7	
Approach LOS	C			A	B	

Timer	1	2	3	4	5	6	7	8
Assigned Phs		2		4	5	6		
Phs Duration (G+Y+Rc), s		67.2		22.8	8.1	59.2		
Change Period (Y+Rc), s		* 6.5		3.5	* 3.1	* 6.5		
Max Green Setting (Gmax), s		* 55		25.0	* 10	* 42		
Max Q Clear Time (g_c+I1), s		16.3		18.4	3.2	31.4		
Green Ext Time (p_c), s		12.8		0.8	0.1	6.4		

Intersection Summary	
HCM 2010 Ctrl Delay	18.4
HCM 2010 LOS	B

Notes

* HCM 2010 computational engine requires equal clearance times for the phases crossing the barrier.

Lane Group	EBL	EBR	NBL	NBT	SBT
Lane Group Flow (vph)	112	316	70	612	819
v/c Ratio	0.51	0.71	0.16	0.42	0.69
Control Delay	44.1	28.5	3.1	5.0	15.8
Queue Delay	0.0	0.0	0.0	0.0	0.0
Total Delay	44.1	28.5	3.1	5.0	15.8
Queue Length 50th (ft)	61	108	6	98	259
Queue Length 95th (ft)	107	173	18	189	#556
Internal Link Dist (ft)	770			717	290
Turn Bay Length (ft)		250	150		
Base Capacity (vph)	475	472	466	1443	1185
Starvation Cap Reductn	0	0	0	0	0
Spillback Cap Reductn	0	0	0	0	0
Storage Cap Reductn	0	0	0	0	0
Reduced v/c Ratio	0.24	0.67	0.15	0.42	0.69

Intersection Summary

95th percentile volume exceeds capacity, queue may be longer.
Queue shown is maximum after two cycles.

Intersection	
Int Delay, s/veh	8

Movement	EBL	EBR	NBL	NBT	SBT	SBR
Vol, veh/h	92	52	11	638	704	87
Conflicting Peds, #/hr	0	0	0	0	0	0
Sign Control	Stop	Stop	Free	Free	Free	Free
RT Channelized	-	None	-	None	-	None
Storage Length	0	-	-	-	-	-
Veh in Median Storage, #	0	-	-	0	0	-
Grade, %	0	-	-	0	0	-
Peak Hour Factor	95	95	95	95	95	95
Heavy Vehicles, %	2	2	2	2	2	2
Mvmt Flow	97	55	12	672	741	92

Major/Minor	Minor2		Major1		Major2	
Conflicting Flow All	1482	787	833	0	-	0
Stage 1	787	-	-	-	-	-
Stage 2	695	-	-	-	-	-
Critical Hdwy	6.42	6.22	4.12	-	-	-
Critical Hdwy Stg 1	5.42	-	-	-	-	-
Critical Hdwy Stg 2	5.42	-	-	-	-	-
Follow-up Hdwy	3.518	3.318	2.218	-	-	-
Pot Cap-1 Maneuver	138	392	800	-	-	-
Stage 1	449	-	-	-	-	-
Stage 2	495	-	-	-	-	-
Platoon blocked, %				-	-	-
Mov Cap-1 Maneuver	135	392	800	-	-	-
Mov Cap-2 Maneuver	135	-	-	-	-	-
Stage 1	449	-	-	-	-	-
Stage 2	483	-	-	-	-	-

Approach	EB	NB	SB
HCM Control Delay, s	87.3	0.2	0
HCM LOS	F		

Minor Lane/Major Mvmt	NBL	NBT	EBLn1	SBT	SBR
Capacity (veh/h)	800	-	177	-	-
HCM Lane V/C Ratio	0.014	-	0.856	-	-
HCM Control Delay (s)	9.6	0	87.3	-	-
HCM Lane LOS	A	A	F	-	-
HCM 95th %tile Q(veh)	0	-	6.1	-	-

Intersection	
Int Delay, s/veh	2.8

Movement	EBL	EBT	WBT	WBR	SBL	SBR
Vol, veh/h	105	384	74	1	1	117
Conflicting Peds, #/hr	0	0	0	0	0	0
Sign Control	Free	Free	Free	Free	Stop	Stop
RT Channelized	-	None	-	None	-	None
Storage Length	-	-	-	-	-	0
Veh in Median Storage, #	-	0	0	-	0	-
Grade, %	-	0	0	-	0	-
Peak Hour Factor	88	88	88	88	88	88
Heavy Vehicles, %	0	2	2	0	0	2
Mvmt Flow	119	436	84	1	1	133

Major/Minor	Major1		Major2		Minor2	
Conflicting Flow All	85	0	-	0	760	85
Stage 1	-	-	-	-	85	-
Stage 2	-	-	-	-	675	-
Critical Hdwy	4.1	-	-	-	6.4	6.22
Critical Hdwy Stg 1	-	-	-	-	5.4	-
Critical Hdwy Stg 2	-	-	-	-	5.4	-
Follow-up Hdwy	2.2	-	-	-	3.5	3.318
Pot Cap-1 Maneuver	1524	-	-	-	377	974
Stage 1	-	-	-	-	943	-
Stage 2	-	-	-	-	510	-
Platoon blocked, %		-	-	-		
Mov Cap-1 Maneuver	1524	-	-	-	338	974
Mov Cap-2 Maneuver	-	-	-	-	338	-
Stage 1	-	-	-	-	943	-
Stage 2	-	-	-	-	457	-

Approach	EB	WB	SB
HCM Control Delay, s	1.6	0	9.3
HCM LOS			A

Minor Lane/Major Mvmt	EBL	EBT	WBT	WBR	SBLn1
Capacity (veh/h)	1524	-	-	-	974
HCM Lane V/C Ratio	0.078	-	-	-	0.137
HCM Control Delay (s)	7.6	0	-	-	9.3
HCM Lane LOS	A	A	-	-	A
HCM 95th %tile Q(veh)	0.3	-	-	-	0.5

Intersection	
Intersection Delay, s/veh	13.9
Intersection LOS	B

Movement	EBU	EBL	EBT	WBU	WBT	WBR	SBU	SBL	SBR
Vol, veh/h	0	105	384	0	74	1	0	1	117
Peak Hour Factor	0.92	0.88	0.88	0.92	0.88	0.88	0.92	0.88	0.88
Heavy Vehicles, %	2	0	2	2	2	0	2	0	2
Mvmt Flow	0	119	436	0	84	1	0	1	133
Number of Lanes	0	0	1	0	1	0	0	0	1

Approach	EB	WB	SB
Opposing Approach	WB	EB	
Opposing Lanes	1	1	0
Conflicting Approach Left	SB		WB
Conflicting Lanes Left	1	0	1
Conflicting Approach Right		SB	EB
Conflicting Lanes Right	0	1	1
HCM Control Delay	15.9	8.5	8.8
HCM LOS	C	A	A

Lane	EBLn1	WBLn1	SBLn1
Vol Left, %	21%	0%	1%
Vol Thru, %	79%	99%	0%
Vol Right, %	0%	1%	99%
Sign Control	Stop	Stop	Stop
Traffic Vol by Lane	489	75	118
LT Vol	105	0	1
Through Vol	384	74	0
RT Vol	0	1	117
Lane Flow Rate	556	85	134
Geometry Grp	1	1	1
Degree of Util (X)	0.673	0.115	0.177
Departure Headway (Hd)	4.363	4.838	4.743
Convergence, Y/N	Yes	Yes	Yes
Cap	828	738	754
Service Time	2.397	2.886	2.786
HCM Lane V/C Ratio	0.671	0.115	0.178
HCM Control Delay	15.9	8.5	8.8
HCM Lane LOS	C	A	A
HCM 95th-tile Q	5.3	0.4	0.6

Intersection	
Int Delay, s/veh	0.2

Movement	EBT	EBR	WBL	WBT	NBL	NBR
Vol, veh/h	479	1	3	188	1	10
Conflicting Peds, #/hr	0	0	0	0	0	0
Sign Control	Free	Free	Free	Free	Stop	Stop
RT Channelized	-	None	-	None	-	None
Storage Length	-	-	-	-	0	-
Veh in Median Storage, #	0	-	-	0	0	-
Grade, %	0	-	-	0	0	-
Peak Hour Factor	93	93	93	93	93	93
Heavy Vehicles, %	2	0	0	2	0	0
Mvmt Flow	515	1	3	202	1	11

Major/Minor	Major1		Major2		Minor1	
Conflicting Flow All	0	0	516	0	725	516
Stage 1	-	-	-	-	516	-
Stage 2	-	-	-	-	209	-
Critical Hdwy	-	-	4.1	-	6.4	6.2
Critical Hdwy Stg 1	-	-	-	-	5.4	-
Critical Hdwy Stg 2	-	-	-	-	5.4	-
Follow-up Hdwy	-	-	2.2	-	3.5	3.3
Pot Cap-1 Maneuver	-	-	1060	-	395	563
Stage 1	-	-	-	-	603	-
Stage 2	-	-	-	-	831	-
Platoon blocked, %	-	-		-		
Mov Cap-1 Maneuver	-	-	1060	-	394	563
Mov Cap-2 Maneuver	-	-	-	-	394	-
Stage 1	-	-	-	-	603	-
Stage 2	-	-	-	-	829	-

Approach	EB	WB	NB
HCM Control Delay, s	0	0.1	11.8
HCM LOS			B

Minor Lane/Major Mvmt	NBLn1	EBT	EBR	WBL	WBT
Capacity (veh/h)	542	-	-	1060	-
HCM Lane V/C Ratio	0.022	-	-	0.003	-
HCM Control Delay (s)	11.8	-	-	8.4	0
HCM Lane LOS	B	-	-	A	A
HCM 95th %tile Q(veh)	0.1	-	-	0	-

Movement	EBL	EBR	NBL	NBT	SBT	SBR
Lane Configurations						
Volume (veh/h)	168	112	298	932	824	17
Number	7	14	5	2	6	16
Initial Q (Qb), veh	0	0	0	0	0	0
Ped-Bike Adj(A_pbT)	1.00	1.00	1.00			1.00
Parking Bus, Adj	1.00	1.00	1.00	1.00	1.00	1.00
Adj Sat Flow, veh/h/ln	1863	1863	1863	1863	1863	1900
Adj Flow Rate, veh/h	171	114	304	951	841	17
Adj No. of Lanes	1	1	1	1	1	0
Peak Hour Factor	0.98	0.98	0.98	0.98	0.98	0.98
Percent Heavy Veh, %	2	2	2	2	2	2
Cap, veh/h	220	317	445	1425	1190	24
Arrive On Green	0.12	0.12	0.08	0.77	0.65	0.65
Sat Flow, veh/h	1774	1583	1774	1863	1819	37
Grp Volume(v), veh/h	171	114	304	951	0	858
Grp Sat Flow(s),veh/h/ln	1774	1583	1774	1863	0	1856
Q Serve(g_s), s	8.4	5.6	4.6	22.0	0.0	26.8
Cycle Q Clear(g_c), s	8.4	5.6	4.6	22.0	0.0	26.8
Prop In Lane	1.00	1.00	1.00			0.02
Lane Grp Cap(c), veh/h	220	317	445	1425	0	1214
V/C Ratio(X)	0.78	0.36	0.68	0.67	0.00	0.71
Avail Cap(c_a), veh/h	493	561	506	1425	0	1214
HCM Platoon Ratio	1.00	1.00	1.00	1.00	1.00	1.00
Upstream Filter(I)	1.00	1.00	1.00	1.00	0.00	1.00
Uniform Delay (d), s/veh	38.2	31.0	12.1	5.1	0.0	10.0
Incr Delay (d2), s/veh	5.9	0.7	3.2	2.5	0.0	3.5
Initial Q Delay(d3),s/veh	0.0	0.0	0.0	0.0	0.0	0.0
%ile BackOfQ(50%),veh/ln	4.5	5.2	4.9	12.1	0.0	14.8
LnGrp Delay(d),s/veh	44.1	31.7	15.3	7.6	0.0	13.5
LnGrp LOS	D	C	B	A		B
Approach Vol, veh/h	285			1255	858	
Approach Delay, s/veh	39.2			9.4	13.5	
Approach LOS	D			A	B	

Timer	1	2	3	4	5	6	7	8
Assigned Phs		2		4	5	6		
Phs Duration (G+Y+Rc), s		75.4		14.6	10.0	65.4		
Change Period (Y+Rc), s		* 6.5		3.5	* 3.1	* 6.5		
Max Green Setting (Gmax), s		* 55		25.0	* 10	* 42		
Max Q Clear Time (g_c+I1), s		24.0		10.4	6.6	28.8		
Green Ext Time (p_c), s		17.1		0.7	0.3	9.5		

Intersection Summary	
HCM 2010 Ctrl Delay	14.4
HCM 2010 LOS	B

Notes

* HCM 2010 computational engine requires equal clearance times for the phases crossing the barrier.

Lane Group	EBL	EBR	NBL	NBT	SBT
Lane Group Flow (vph)	171	114	304	951	858
v/c Ratio	0.63	0.16	0.67	0.72	1.02
Control Delay	45.2	5.1	27.4	12.1	61.0
Queue Delay	0.0	0.0	0.0	0.0	0.0
Total Delay	45.2	5.1	27.4	12.1	61.0
Queue Length 50th (ft)	92	5	101	256	~525
Queue Length 95th (ft)	147	35	#256	518	#756
Internal Link Dist (ft)	770			717	290
Turn Bay Length (ft)		250	150		
Base Capacity (vph)	475	705	455	1314	844
Starvation Cap Reductn	0	0	0	0	0
Spillback Cap Reductn	0	0	0	0	0
Storage Cap Reductn	0	0	0	0	0
Reduced v/c Ratio	0.36	0.16	0.67	0.72	1.02

Intersection Summary

~ Volume exceeds capacity, queue is theoretically infinite.
Queue shown is maximum after two cycles.

95th percentile volume exceeds capacity, queue may be longer.
Queue shown is maximum after two cycles.

Intersection	
Int Delay, s/veh	4.6

Movement	EBL	EBR	NBL	NBT	SBT	SBR
Vol, veh/h	34	18	28	1047	834	278
Conflicting Peds, #/hr	0	0	0	0	0	0
Sign Control	Stop	Stop	Free	Free	Free	Free
RT Channelized	-	None	-	None	-	None
Storage Length	0	-	-	-	-	-
Veh in Median Storage, #	0	-	-	0	0	-
Grade, %	0	-	-	0	0	-
Peak Hour Factor	95	95	95	95	95	95
Heavy Vehicles, %	2	2	2	2	2	2
Mvmt Flow	36	19	29	1102	878	293

Major/Minor	Minor2		Major1		Major2	
Conflicting Flow All	2185	1024	1171	0	-	0
Stage 1	1024	-	-	-	-	-
Stage 2	1161	-	-	-	-	-
Critical Hdwy	6.42	6.22	4.12	-	-	-
Critical Hdwy Stg 1	5.42	-	-	-	-	-
Critical Hdwy Stg 2	5.42	-	-	-	-	-
Follow-up Hdwy	3.518	3.318	2.218	-	-	-
Pot Cap-1 Maneuver	50	286	596	-	-	-
Stage 1	347	-	-	-	-	-
Stage 2	298	-	-	-	-	-
Platoon blocked, %				-	-	-
Mov Cap-1 Maneuver	44	286	596	-	-	-
Mov Cap-2 Maneuver	44	-	-	-	-	-
Stage 1	347	-	-	-	-	-
Stage 2	261	-	-	-	-	-

Approach	EB	NB	SB
HCM Control Delay, s	190.9	0.3	0
HCM LOS	F		

Minor Lane/Major Mvmt	NBL	NBT	EBLn1	SBT	SBR
Capacity (veh/h)	596	-	62	-	-
HCM Lane V/C Ratio	0.049	-	0.883	-	-
HCM Control Delay (s)	11.4	0	190.9	-	-
HCM Lane LOS	B	A	F	-	-
HCM 95th %tile Q(veh)	0.2	-	4.1	-	-

Intersection	
Int Delay, s/veh	4.6

Movement	EBL	EBT	WBT	WBR	SBL	SBR
Vol, veh/h	40	264	284	1	1	278
Conflicting Peds, #/hr	0	0	0	0	0	0
Sign Control	Free	Free	Free	Free	Stop	Stop
RT Channelized	-	None	-	None	-	None
Storage Length	-	-	-	-	-	0
Veh in Median Storage, #	-	0	0	-	0	-
Grade, %	-	0	0	-	0	-
Peak Hour Factor	93	93	93	93	93	93
Heavy Vehicles, %	0	2	2	0	0	2
Mvmt Flow	43	284	305	1	1	299

Major/Minor	Major1		Major2		Minor2	
Conflicting Flow All	306	0	-	0	676	306
Stage 1	-	-	-	-	306	-
Stage 2	-	-	-	-	370	-
Critical Hdwy	4.1	-	-	-	6.4	6.22
Critical Hdwy Stg 1	-	-	-	-	5.4	-
Critical Hdwy Stg 2	-	-	-	-	5.4	-
Follow-up Hdwy	2.2	-	-	-	3.5	3.318
Pot Cap-1 Maneuver	1266	-	-	-	422	734
Stage 1	-	-	-	-	751	-
Stage 2	-	-	-	-	703	-
Platoon blocked, %		-	-	-		
Mov Cap-1 Maneuver	1266	-	-	-	405	734
Mov Cap-2 Maneuver	-	-	-	-	405	-
Stage 1	-	-	-	-	751	-
Stage 2	-	-	-	-	675	-

Approach	EB	WB	SB
HCM Control Delay, s	1	0	13.2
HCM LOS			B

Minor Lane/Major Mvmt	EBL	EBT	WBT	WBR	SBLn1
Capacity (veh/h)	1266	-	-	-	734
HCM Lane V/C Ratio	0.034	-	-	-	0.407
HCM Control Delay (s)	7.9	0	-	-	13.2
HCM Lane LOS	A	A	-	-	B
HCM 95th %tile Q(veh)	0.1	-	-	-	2

Intersection	
Intersection Delay, s/veh	12
Intersection LOS	B

Movement	EBU	EBL	EBT	WBU	WBT	WBR	SBU	SBL	SBR
Vol, veh/h	0	40	264	0	284	1	0	1	278
Peak Hour Factor	0.92	0.93	0.93	0.92	0.93	0.93	0.92	0.93	0.93
Heavy Vehicles, %	2	0	2	2	2	0	2	0	2
Mvmt Flow	0	43	284	0	305	1	0	1	299
Number of Lanes	0	0	1	0	1	0	0	0	1

Approach	EB	WB	SB
Opposing Approach	WB	EB	
Opposing Lanes	1	1	0
Conflicting Approach Left	SB		WB
Conflicting Lanes Left	1	0	1
Conflicting Approach Right		SB	EB
Conflicting Lanes Right	0	1	1
HCM Control Delay	12.6	12.2	11.2
HCM LOS	B	B	B

Lane	EBLn1	WBLn1	SBLn1
Vol Left, %	13%	0%	0%
Vol Thru, %	87%	100%	0%
Vol Right, %	0%	0%	100%
Sign Control	Stop	Stop	Stop
Traffic Vol by Lane	304	285	279
LT Vol	40	0	1
Through Vol	264	284	0
RT Vol	0	1	278
Lane Flow Rate	327	306	300
Geometry Grp	1	1	1
Degree of Util (X)	0.468	0.441	0.4
Departure Headway (Hd)	5.149	5.18	4.929
Convergence, Y/N	Yes	Yes	Yes
Cap	703	699	735
Service Time	3.158	3.191	2.929
HCM Lane V/C Ratio	0.465	0.438	0.408
HCM Control Delay	12.6	12.2	11.2
HCM Lane LOS	B	B	B
HCM 95th-tile Q	2.5	2.3	1.9

Intersection	
Int Delay, s/veh	0.3

Movement	EBT	EBR	WBL	WBT	NBL	NBR
Vol, veh/h	299	1	11	551	3	5
Conflicting Peds, #/hr	0	0	0	0	0	0
Sign Control	Free	Free	Free	Free	Stop	Stop
RT Channelized	-	None	-	None	-	None
Storage Length	-	-	-	-	0	-
Veh in Median Storage, #	0	-	-	0	0	-
Grade, %	0	-	-	0	0	-
Peak Hour Factor	90	90	90	90	90	90
Heavy Vehicles, %	2	0	0	2	0	0
Mvmt Flow	332	1	12	612	3	6

Major/Minor	Major1		Major2		Minor1	
Conflicting Flow All	0	0	333	0	970	333
Stage 1	-	-	-	-	333	-
Stage 2	-	-	-	-	637	-
Critical Hdwy	-	-	4.1	-	6.4	6.2
Critical Hdwy Stg 1	-	-	-	-	5.4	-
Critical Hdwy Stg 2	-	-	-	-	5.4	-
Follow-up Hdwy	-	-	2.2	-	3.5	3.3
Pot Cap-1 Maneuver	-	-	1238	-	283	713
Stage 1	-	-	-	-	731	-
Stage 2	-	-	-	-	531	-
Platoon blocked, %	-	-		-		
Mov Cap-1 Maneuver	-	-	1238	-	279	713
Mov Cap-2 Maneuver	-	-	-	-	279	-
Stage 1	-	-	-	-	731	-
Stage 2	-	-	-	-	523	-

Approach	EB	WB	NB
HCM Control Delay, s	0	0.2	13.2
HCM LOS			B

Minor Lane/Major Mvmt	NBLn1	EBT	EBR	WBL	WBT
Capacity (veh/h)	450	-	-	1238	-
HCM Lane V/C Ratio	0.02	-	-	0.01	-
HCM Control Delay (s)	13.2	-	-	7.9	0
HCM Lane LOS	B	-	-	A	A
HCM 95th %tile Q(veh)	0.1	-	-	0	-

Year 2018 Build Conditions

Movement	EBL	EBR	NBL	NBT	SBT	SBR
Lane Configurations						
Volume (veh/h)	118	320	73	563	742	11
Number	7	14	5	2	6	16
Initial Q (Qb), veh	0	0	0	0	0	0
Ped-Bike Adj(A_pbT)	1.00	1.00	1.00			1.00
Parking Bus, Adj	1.00	1.00	1.00	1.00	1.00	1.00
Adj Sat Flow, veh/h/ln	1863	1863	1863	1863	1863	1900
Adj Flow Rate, veh/h	128	348	79	612	807	12
Adj No. of Lanes	1	1	1	1	1	0
Peak Hour Factor	0.92	0.92	0.92	0.92	0.92	0.92
Percent Heavy Veh, %	2	2	2	2	2	2
Cap, veh/h	411	457	330	1225	1035	15
Arrive On Green	0.23	0.23	0.06	0.66	0.57	0.57
Sat Flow, veh/h	1774	1583	1774	1863	1831	27
Grp Volume(v), veh/h	128	348	79	612	0	819
Grp Sat Flow(s),veh/h/ln	1774	1583	1774	1863	0	1858
Q Serve(g_s), s	5.4	18.0	1.5	15.1	0.0	30.8
Cycle Q Clear(g_c), s	5.4	18.0	1.5	15.1	0.0	30.8
Prop In Lane	1.00	1.00	1.00			0.01
Lane Grp Cap(c), veh/h	411	457	330	1225	0	1051
V/C Ratio(X)	0.31	0.76	0.24	0.50	0.00	0.78
Avail Cap(c_a), veh/h	493	531	425	1225	0	1051
HCM Platoon Ratio	1.00	1.00	1.00	1.00	1.00	1.00
Upstream Filter(I)	1.00	1.00	1.00	1.00	0.00	1.00
Uniform Delay (d), s/veh	28.6	29.2	12.7	7.9	0.0	15.2
Incr Delay (d2), s/veh	0.4	5.5	0.4	1.5	0.0	5.7
Initial Q Delay(d3),s/veh	0.0	0.0	0.0	0.0	0.0	0.0
%ile BackOfQ(50%),veh/ln	2.7	15.5	0.8	8.1	0.0	17.4
LnGrp Delay(d),s/veh	29.1	34.7	13.1	9.3	0.0	20.9
LnGrp LOS	C	C	B	A		C
Approach Vol, veh/h	476			691	819	
Approach Delay, s/veh	33.2			9.8	20.9	
Approach LOS	C			A	C	

Timer	1	2	3	4	5	6	7	8
Assigned Phs		2		4	5	6		
Phs Duration (G+Y+Rc), s		65.7		24.3	8.3	57.4		
Change Period (Y+Rc), s		* 6.5		3.5	* 3.1	* 6.5		
Max Green Setting (Gmax), s		* 55		25.0	* 10	* 42		
Max Q Clear Time (g_c+I1), s		17.1		20.0	3.5	32.8		
Green Ext Time (p_c), s		12.7		0.8	0.1	5.8		

Intersection Summary	
HCM 2010 Ctrl Delay	20.0
HCM 2010 LOS	B

Notes

* HCM 2010 computational engine requires equal clearance times for the phases crossing the barrier.

Lane Group	EBL	EBR	NBL	NBT	SBT
Lane Group Flow (vph)	128	348	79	612	819
v/c Ratio	0.54	0.70	0.20	0.45	0.73
Control Delay	44.4	27.1	3.7	5.9	18.7
Queue Delay	0.0	0.0	0.0	0.0	0.0
Total Delay	44.4	27.1	3.7	5.9	18.7
Queue Length 50th (ft)	69	124	7	104	282
Queue Length 95th (ft)	118	190	21	200	#637
Internal Link Dist (ft)	770			717	290
Turn Bay Length (ft)		250	150		
Base Capacity (vph)	475	527	434	1352	1118
Starvation Cap Reductn	0	0	0	0	0
Spillback Cap Reductn	0	0	0	0	0
Storage Cap Reductn	0	0	0	0	0
Reduced v/c Ratio	0.27	0.66	0.18	0.45	0.73

Intersection Summary

95th percentile volume exceeds capacity, queue may be longer.
Queue shown is maximum after two cycles.

Intersection	
Int Delay, s/veh	8.5

Movement	EBL	EBR	NBL	NBT	SBT	SBR
Vol, veh/h	92	52	11	653	704	92
Conflicting Peds, #/hr	0	0	0	0	0	0
Sign Control	Stop	Stop	Free	Free	Free	Free
RT Channelized	-	None	-	None	-	None
Storage Length	0	-	-	-	-	-
Veh in Median Storage, #	0	-	-	0	0	-
Grade, %	0	-	-	0	0	-
Peak Hour Factor	95	95	95	95	95	95
Heavy Vehicles, %	2	2	2	2	2	2
Mvmt Flow	97	55	12	687	741	97

Major/Minor	Minor2		Major1		Major2	
Conflicting Flow All	1500	789	838	0	-	0
Stage 1	789	-	-	-	-	-
Stage 2	711	-	-	-	-	-
Critical Hdwy	6.42	6.22	4.12	-	-	-
Critical Hdwy Stg 1	5.42	-	-	-	-	-
Critical Hdwy Stg 2	5.42	-	-	-	-	-
Follow-up Hdwy	3.518	3.318	2.218	-	-	-
Pot Cap-1 Maneuver	134	391	796	-	-	-
Stage 1	448	-	-	-	-	-
Stage 2	487	-	-	-	-	-
Platoon blocked, %				-	-	-
Mov Cap-1 Maneuver	131	391	796	-	-	-
Mov Cap-2 Maneuver	131	-	-	-	-	-
Stage 1	448	-	-	-	-	-
Stage 2	475	-	-	-	-	-

Approach	EB	NB	SB
HCM Control Delay, s	94.2	0.2	0
HCM LOS	F		

Minor Lane/Major Mvmt	NBL	NBT	EBLn1	SBT	SBR
Capacity (veh/h)	796	-	172	-	-
HCM Lane V/C Ratio	0.015	-	0.881	-	-
HCM Control Delay (s)	9.6	0	94.2	-	-
HCM Lane LOS	A	A	F	-	-
HCM 95th %tile Q(veh)	0	-	6.4	-	-

Intersection	
Int Delay, s/veh	2.6

Movement	EBL	EBT	WBT	WBR	SBL	SBR
Vol, veh/h	105	428	83	1	1	122
Conflicting Peds, #/hr	0	0	0	0	0	0
Sign Control	Free	Free	Free	Free	Stop	Stop
RT Channelized	-	None	-	None	-	None
Storage Length	-	-	-	-	-	0
Veh in Median Storage, #	-	0	0	-	0	-
Grade, %	-	0	0	-	0	-
Peak Hour Factor	88	88	88	88	88	88
Heavy Vehicles, %	0	2	2	0	0	2
Mvmt Flow	119	486	94	1	1	139

Major/Minor	Major1		Major2		Minor2	
Conflicting Flow All	95	0	-	0	820	95
Stage 1	-	-	-	-	95	-
Stage 2	-	-	-	-	725	-
Critical Hdwy	4.1	-	-	-	6.4	6.22
Critical Hdwy Stg 1	-	-	-	-	5.4	-
Critical Hdwy Stg 2	-	-	-	-	5.4	-
Follow-up Hdwy	2.2	-	-	-	3.5	3.318
Pot Cap-1 Maneuver	1512	-	-	-	347	962
Stage 1	-	-	-	-	934	-
Stage 2	-	-	-	-	483	-
Platoon blocked, %		-	-	-		
Mov Cap-1 Maneuver	1512	-	-	-	310	962
Mov Cap-2 Maneuver	-	-	-	-	310	-
Stage 1	-	-	-	-	934	-
Stage 2	-	-	-	-	431	-

Approach	EB	WB	SB
HCM Control Delay, s	1.5	0	9.4
HCM LOS			A

Minor Lane/Major Mvmt	EBL	EBT	WBT	WBR	SBLn1
Capacity (veh/h)	1512	-	-	-	962
HCM Lane V/C Ratio	0.079	-	-	-	0.144
HCM Control Delay (s)	7.6	0	-	-	9.4
HCM Lane LOS	A	A	-	-	A
HCM 95th %tile Q(veh)	0.3	-	-	-	0.5

Intersection	
Intersection Delay, s/veh	16.1
Intersection LOS	C

Movement	EBU	EBL	EBT	WBU	WBT	WBR	SBU	SBL	SBR
Vol, veh/h	0	105	428	0	83	1	0	1	122
Peak Hour Factor	0.92	0.88	0.88	0.92	0.88	0.88	0.92	0.88	0.88
Heavy Vehicles, %	2	0	2	2	2	0	2	0	2
Mvmt Flow	0	119	486	0	94	1	0	1	139
Number of Lanes	0	0	1	0	1	0	0	0	1

Approach	EB	WB	SB
Opposing Approach	WB	EB	
Opposing Lanes	1	1	0
Conflicting Approach Left	SB		WB
Conflicting Lanes Left	1	0	1
Conflicting Approach Right		SB	EB
Conflicting Lanes Right	0	1	1
HCM Control Delay	18.9	8.7	9.1
HCM LOS	C	A	A

Lane	EBLn1	WBLn1	SBLn1
Vol Left, %	20%	0%	1%
Vol Thru, %	80%	99%	0%
Vol Right, %	0%	1%	99%
Sign Control	Stop	Stop	Stop
Traffic Vol by Lane	533	84	123
LT Vol	105	0	1
Through Vol	428	83	0
RT Vol	0	1	122
Lane Flow Rate	606	95	140
Geometry Grp	1	1	1
Degree of Util (X)	0.739	0.13	0.189
Departure Headway (Hd)	4.394	4.92	4.879
Convergence, Y/N	Yes	Yes	Yes
Cap	824	725	732
Service Time	2.431	2.975	2.93
HCM Lane V/C Ratio	0.735	0.131	0.191
HCM Control Delay	18.9	8.7	9.1
HCM Lane LOS	C	A	A
HCM 95th-tile Q	6.8	0.4	0.7

Intersection	
Int Delay, s/veh	1.2

Movement	EBL	EBT	WBT	WBR	SBL	SBR
Vol, veh/h	5	489	191	14	44	15
Conflicting Peds, #/hr	0	0	0	0	0	0
Sign Control	Free	Free	Free	Free	Stop	Stop
RT Channelized	-	None	-	None	-	None
Storage Length	-	-	-	-	0	-
Veh in Median Storage, #	-	0	0	-	0	-
Grade, %	-	0	0	-	0	-
Peak Hour Factor	92	92	92	92	92	92
Heavy Vehicles, %	2	2	2	2	2	2
Mvmt Flow	5	532	208	15	48	16

Major/Minor	Major1		Major2		Minor2	
Conflicting Flow All	223	0	-	0	757	215
Stage 1	-	-	-	-	215	-
Stage 2	-	-	-	-	542	-
Critical Hdwy	4.12	-	-	-	6.42	6.22
Critical Hdwy Stg 1	-	-	-	-	5.42	-
Critical Hdwy Stg 2	-	-	-	-	5.42	-
Follow-up Hdwy	2.218	-	-	-	3.518	3.318
Pot Cap-1 Maneuver	1346	-	-	-	375	825
Stage 1	-	-	-	-	821	-
Stage 2	-	-	-	-	583	-
Platoon blocked, %		-	-	-		
Mov Cap-1 Maneuver	1346	-	-	-	373	825
Mov Cap-2 Maneuver	-	-	-	-	373	-
Stage 1	-	-	-	-	821	-
Stage 2	-	-	-	-	580	-

Approach	EB	WB	SB
HCM Control Delay, s	0.1	0	14.8
HCM LOS			B

Minor Lane/Major Mvmt	EBL	EBT	WBT	WBR	SBLn1
Capacity (veh/h)	1346	-	-	-	433
HCM Lane V/C Ratio	0.004	-	-	-	0.148
HCM Control Delay (s)	7.7	0	-	-	14.8
HCM Lane LOS	A	A	-	-	B
HCM 95th %tile Q(veh)	0	-	-	-	0.5

Intersection	
Int Delay, s/veh	0.2

Movement	EBT	EBR	WBL	WBT	NBL	NBR
Vol, veh/h	484	1	3	203	1	10
Conflicting Peds, #/hr	0	0	0	0	0	0
Sign Control	Free	Free	Free	Free	Stop	Stop
RT Channelized	-	None	-	None	-	None
Storage Length	-	-	-	-	0	-
Veh in Median Storage, #	0	-	-	0	0	-
Grade, %	0	-	-	0	0	-
Peak Hour Factor	93	93	93	93	93	93
Heavy Vehicles, %	2	0	0	2	0	0
Mvmt Flow	520	1	3	218	1	11

Major/Minor	Major1		Major2		Minor1	
Conflicting Flow All	0	0	522	0	746	521
Stage 1	-	-	-	-	521	-
Stage 2	-	-	-	-	225	-
Critical Hdwy	-	-	4.1	-	6.4	6.2
Critical Hdwy Stg 1	-	-	-	-	5.4	-
Critical Hdwy Stg 2	-	-	-	-	5.4	-
Follow-up Hdwy	-	-	2.2	-	3.5	3.3
Pot Cap-1 Maneuver	-	-	1055	-	384	559
Stage 1	-	-	-	-	600	-
Stage 2	-	-	-	-	817	-
Platoon blocked, %	-	-		-		
Mov Cap-1 Maneuver	-	-	1055	-	383	559
Mov Cap-2 Maneuver	-	-	-	-	383	-
Stage 1	-	-	-	-	600	-
Stage 2	-	-	-	-	815	-

Approach	EB	WB	NB
HCM Control Delay, s	0	0.1	11.9
HCM LOS			B

Minor Lane/Major Mvmt	NBLn1	EBT	EBR	WBL	WBT
Capacity (veh/h)	537	-	-	1055	-
HCM Lane V/C Ratio	0.022	-	-	0.003	-
HCM Control Delay (s)	11.9	-	-	8.4	0
HCM Lane LOS	B	-	-	A	A
HCM 95th %tile Q(veh)	0.1	-	-	0	-

Movement	EBL	EBR	NBL	NBT	SBT	SBR
Lane Configurations						
Volume (veh/h)	178	133	334	932	824	17
Number	7	14	5	2	6	16
Initial Q (Qb), veh	0	0	0	0	0	0
Ped-Bike Adj(A_pbT)	1.00	1.00	1.00			1.00
Parking Bus, Adj	1.00	1.00	1.00	1.00	1.00	1.00
Adj Sat Flow, veh/h/ln	1863	1863	1863	1863	1863	1900
Adj Flow Rate, veh/h	182	136	341	951	841	17
Adj No. of Lanes	1	1	1	1	1	0
Peak Hour Factor	0.98	0.98	0.98	0.98	0.98	0.98
Percent Heavy Veh, %	2	2	2	2	2	2
Cap, veh/h	232	344	431	1412	1141	23
Arrive On Green	0.13	0.13	0.09	0.76	0.63	0.63
Sat Flow, veh/h	1774	1583	1774	1863	1819	37
Grp Volume(v), veh/h	182	136	341	951	0	858
Grp Sat Flow(s),veh/h/ln	1774	1583	1774	1863	0	1856
Q Serve(g_s), s	8.9	6.6	5.7	22.7	0.0	28.9
Cycle Q Clear(g_c), s	8.9	6.6	5.7	22.7	0.0	28.9
Prop In Lane	1.00	1.00	1.00			0.02
Lane Grp Cap(c), veh/h	232	344	431	1412	0	1164
V/C Ratio(X)	0.79	0.39	0.79	0.67	0.00	0.74
Avail Cap(c_a), veh/h	483	569	456	1412	0	1164
HCM Platoon Ratio	1.00	1.00	1.00	1.00	1.00	1.00
Upstream Filter(I)	1.00	1.00	1.00	1.00	0.00	1.00
Uniform Delay (d), s/veh	37.9	30.1	14.9	5.4	0.0	11.6
Incr Delay (d2), s/veh	5.8	0.7	8.8	2.6	0.0	4.2
Initial Q Delay(d3),s/veh	0.0	0.0	0.0	0.0	0.0	0.0
%ile BackOfQ(50%),veh/ln	4.8	6.1	6.5	12.4	0.0	15.9
LnGrp Delay(d),s/veh	43.7	30.9	23.7	8.0	0.0	15.8
LnGrp LOS	D	C	C	A		B
Approach Vol, veh/h	318			1292	858	
Approach Delay, s/veh	38.2			12.1	15.8	
Approach LOS	D			B	B	

Timer	1	2	3	4	5	6	7	8
Assigned Phs		2		4	5	6		
Phs Duration (G+Y+Rc), s		74.2		15.8	11.8	62.4		
Change Period (Y+Rc), s		6.0		4.0	4.0	6.0		
Max Green Setting (Gmax), s		55.5		24.5	9.1	42.4		
Max Q Clear Time (g_c+I1), s		24.7		10.9	7.7	30.9		
Green Ext Time (p_c), s		17.1		0.8	0.2	8.6		

Intersection Summary	
HCM 2010 Ctrl Delay	16.8
HCM 2010 LOS	B

Lane Group	EBL	EBR	NBL	NBT	SBT
Lane Group Flow (vph)	182	136	341	951	858
v/c Ratio	0.65	0.19	0.80	0.73	1.01
Control Delay	45.3	6.3	39.0	12.6	60.0
Queue Delay	0.0	0.0	0.0	0.0	0.0
Total Delay	45.3	6.3	39.0	12.6	60.0
Queue Length 50th (ft)	98	11	132	265	~488
Queue Length 95th (ft)	154	45	#335	533	#750
Internal Link Dist (ft)	770			717	290
Turn Bay Length (ft)		250	150		
Base Capacity (vph)	465	699	424	1303	846
Starvation Cap Reductn	0	0	0	0	0
Spillback Cap Reductn	0	0	0	0	0
Storage Cap Reductn	0	0	0	0	0
Reduced v/c Ratio	0.39	0.19	0.80	0.73	1.01

Intersection Summary

~ Volume exceeds capacity, queue is theoretically infinite.
Queue shown is maximum after two cycles.

95th percentile volume exceeds capacity, queue may be longer.
Queue shown is maximum after two cycles.

Intersection	
Int Delay, s/veh	4.7

Movement	EBL	EBR	NBL	NBT	SBT	SBR
Vol, veh/h	34	18	28	1057	834	296
Conflicting Peds, #/hr	0	0	0	0	0	0
Sign Control	Stop	Stop	Free	Free	Free	Free
RT Channelized	-	None	-	None	-	None
Storage Length	0	-	-	-	-	-
Veh in Median Storage, #	0	-	-	0	0	-
Grade, %	0	-	-	0	0	-
Peak Hour Factor	95	95	95	95	95	95
Heavy Vehicles, %	2	2	2	2	2	2
Mvmt Flow	36	19	29	1113	878	312

Major/Minor	Minor2		Major1		Major2	
Conflicting Flow All	2206	1034	1189	0	-	0
Stage 1	1034	-	-	-	-	-
Stage 2	1172	-	-	-	-	-
Critical Hdwy	6.42	6.22	4.12	-	-	-
Critical Hdwy Stg 1	5.42	-	-	-	-	-
Critical Hdwy Stg 2	5.42	-	-	-	-	-
Follow-up Hdwy	3.518	3.318	2.218	-	-	-
Pot Cap-1 Maneuver	49	282	587	-	-	-
Stage 1	343	-	-	-	-	-
Stage 2	294	-	-	-	-	-
Platoon blocked, %				-	-	-
Mov Cap-1 Maneuver	43	282	587	-	-	-
Mov Cap-2 Maneuver	43	-	-	-	-	-
Stage 1	343	-	-	-	-	-
Stage 2	256	-	-	-	-	-

Approach	EB	NB	SB
HCM Control Delay, s	197	0.3	0
HCM LOS	F		

Minor Lane/Major Mvmt	NBL	NBT	EBLn1	SBT	SBR
Capacity (veh/h)	587	-	61	-	-
HCM Lane V/C Ratio	0.05	-	0.897	-	-
HCM Control Delay (s)	11.5	0	197	-	-
HCM Lane LOS	B	A	F	-	-
HCM 95th %tile Q(veh)	0.2	-	4.2	-	-

Intersection	
Int Delay, s/veh	4.8

Movement	EBL	EBT	WBT	WBR	SBL	SBR
Vol, veh/h	40	295	320	1	1	296
Conflicting Peds, #/hr	0	0	0	0	0	0
Sign Control	Free	Free	Free	Free	Stop	Stop
RT Channelized	-	None	-	None	-	None
Storage Length	-	-	-	-	-	0
Veh in Median Storage, #	-	0	0	-	0	-
Grade, %	-	0	0	-	0	-
Peak Hour Factor	93	93	93	93	93	93
Heavy Vehicles, %	0	2	2	0	0	2
Mvmt Flow	43	317	344	1	1	318

Major/Minor	Major1		Major2		Minor2	
Conflicting Flow All	345	0	-	0	748	345
Stage 1	-	-	-	-	345	-
Stage 2	-	-	-	-	403	-
Critical Hdwy	4.1	-	-	-	6.4	6.22
Critical Hdwy Stg 1	-	-	-	-	5.4	-
Critical Hdwy Stg 2	-	-	-	-	5.4	-
Follow-up Hdwy	2.2	-	-	-	3.5	3.318
Pot Cap-1 Maneuver	1225	-	-	-	383	698
Stage 1	-	-	-	-	722	-
Stage 2	-	-	-	-	679	-
Platoon blocked, %		-	-	-		
Mov Cap-1 Maneuver	1225	-	-	-	367	698
Mov Cap-2 Maneuver	-	-	-	-	367	-
Stage 1	-	-	-	-	722	-
Stage 2	-	-	-	-	650	-

Approach	EB	WB	SB
HCM Control Delay, s	1	0	14.4
HCM LOS			B

Minor Lane/Major Mvmt	EBL	EBT	WBT	WBR	SBLn1
Capacity (veh/h)	1225	-	-	-	698
HCM Lane V/C Ratio	0.035	-	-	-	0.456
HCM Control Delay (s)	8	0	-	-	14.4
HCM Lane LOS	A	A	-	-	B
HCM 95th %tile Q(veh)	0.1	-	-	-	2.4

Intersection	
Intersection Delay, s/veh	13.5
Intersection LOS	B

Movement	EBU	EBL	EBT	WBU	WBT	WBR	SBU	SBL	SBR
Vol, veh/h	0	40	295	0	320	1	0	1	296
Peak Hour Factor	0.92	0.93	0.93	0.92	0.93	0.93	0.92	0.93	0.93
Heavy Vehicles, %	2	0	2	2	2	0	2	0	2
Mvmt Flow	0	43	317	0	344	1	0	1	318
Number of Lanes	0	0	1	0	1	0	0	0	1

Approach	EB	WB	SB
Opposing Approach	WB	EB	
Opposing Lanes	1	1	0
Conflicting Approach Left	SB		WB
Conflicting Lanes Left	1	0	1
Conflicting Approach Right		SB	EB
Conflicting Lanes Right	0	1	1
HCM Control Delay	14.2	13.8	12.3
HCM LOS	B	B	B

Lane	EBLn1	WBLn1	SBLn1
Vol Left, %	12%	0%	0%
Vol Thru, %	88%	100%	0%
Vol Right, %	0%	0%	100%
Sign Control	Stop	Stop	Stop
Traffic Vol by Lane	335	321	297
LT Vol	40	0	1
Through Vol	295	320	0
RT Vol	0	1	296
Lane Flow Rate	360	345	319
Geometry Grp	1	1	1
Degree of Util (X)	0.531	0.511	0.452
Departure Headway (Hd)	5.302	5.33	5.1
Convergence, Y/N	Yes	Yes	Yes
Cap	681	677	706
Service Time	3.34	3.369	3.143
HCM Lane V/C Ratio	0.529	0.51	0.452
HCM Control Delay	14.2	13.8	12.3
HCM Lane LOS	B	B	B
HCM 95th-tile Q	3.1	2.9	2.4

Intersection	
Int Delay, s/veh	1

Movement	EBL	EBT	WBT	WBR	SBL	SBR
Vol, veh/h	18	304	562	54	31	10
Conflicting Peds, #/hr	0	0	0	0	0	0
Sign Control	Free	Free	Free	Free	Stop	Stop
RT Channelized	-	None	-	None	-	None
Storage Length	-	-	-	-	0	-
Veh in Median Storage, #	-	0	0	-	0	-
Grade, %	-	0	0	-	0	-
Peak Hour Factor	92	92	92	92	92	92
Heavy Vehicles, %	2	2	2	2	2	2
Mvmt Flow	20	330	611	59	34	11

Major/Minor	Major1		Major2		Minor2	
Conflicting Flow All	670	0	-	0	1010	640
Stage 1	-	-	-	-	640	-
Stage 2	-	-	-	-	370	-
Critical Hdwy	4.12	-	-	-	6.42	6.22
Critical Hdwy Stg 1	-	-	-	-	5.42	-
Critical Hdwy Stg 2	-	-	-	-	5.42	-
Follow-up Hdwy	2.218	-	-	-	3.518	3.318
Pot Cap-1 Maneuver	920	-	-	-	266	475
Stage 1	-	-	-	-	525	-
Stage 2	-	-	-	-	699	-
Platoon blocked, %		-	-	-		
Mov Cap-1 Maneuver	920	-	-	-	259	475
Mov Cap-2 Maneuver	-	-	-	-	259	-
Stage 1	-	-	-	-	525	-
Stage 2	-	-	-	-	680	-

Approach	EB	WB	SB
HCM Control Delay, s	0.5	0	19.6
HCM LOS			C

Minor Lane/Major Mvmt	EBL	EBT	WBT	WBR	SBLn1
Capacity (veh/h)	920	-	-	-	291
HCM Lane V/C Ratio	0.021	-	-	-	0.153
HCM Control Delay (s)	9	0	-	-	19.6
HCM Lane LOS	A	A	-	-	C
HCM 95th %tile Q(veh)	0.1	-	-	-	0.5

Intersection	
Int Delay, s/veh	0.2

Movement	EBT	EBR	WBL	WBT	NBL	NBR
Vol, veh/h	317	1	11	561	3	5
Conflicting Peds, #/hr	0	0	0	0	0	0
Sign Control	Free	Free	Free	Free	Stop	Stop
RT Channelized	-	None	-	None	-	None
Storage Length	-	-	-	-	0	-
Veh in Median Storage, #	0	-	-	0	0	-
Grade, %	0	-	-	0	0	-
Peak Hour Factor	90	90	90	90	90	90
Heavy Vehicles, %	2	0	0	2	0	0
Mvmt Flow	352	1	12	623	3	6

Major/Minor	Major1		Major2		Minor1	
Conflicting Flow All	0	0	353	0	1001	353
Stage 1	-	-	-	-	353	-
Stage 2	-	-	-	-	648	-
Critical Hdwy	-	-	4.1	-	6.4	6.2
Critical Hdwy Stg 1	-	-	-	-	5.4	-
Critical Hdwy Stg 2	-	-	-	-	5.4	-
Follow-up Hdwy	-	-	2.2	-	3.5	3.3
Pot Cap-1 Maneuver	-	-	1217	-	271	695
Stage 1	-	-	-	-	716	-
Stage 2	-	-	-	-	524	-
Platoon blocked, %	-	-		-		
Mov Cap-1 Maneuver	-	-	1217	-	267	695
Mov Cap-2 Maneuver	-	-	-	-	267	-
Stage 1	-	-	-	-	716	-
Stage 2	-	-	-	-	516	-

Approach	EB	WB	NB
HCM Control Delay, s	0	0.2	13.5
HCM LOS			B

Minor Lane/Major Mvmt	NBLn1	EBT	EBR	WBL	WBT
Capacity (veh/h)	434	-	-	1217	-
HCM Lane V/C Ratio	0.02	-	-	0.01	-
HCM Control Delay (s)	13.5	-	-	8	0
HCM Lane LOS	B	-	-	A	A
HCM 95th %tile Q(veh)	0.1	-	-	0	-

Year 2018 Build Conditions
With Timing Modifications

Movement	EBL	EBR	NBL	NBT	SBT	SBR
Lane Configurations						
Volume (veh/h)	118	320	73	563	742	11
Number	7	14	5	2	6	16
Initial Q (Qb), veh	0	0	0	0	0	0
Ped-Bike Adj(A_pbT)	1.00	1.00	1.00			1.00
Parking Bus, Adj	1.00	1.00	1.00	1.00	1.00	1.00
Adj Sat Flow, veh/h/ln	1863	1863	1863	1863	1863	1900
Adj Flow Rate, veh/h	128	348	79	612	807	12
Adj No. of Lanes	1	1	1	1	1	0
Peak Hour Factor	0.92	0.92	0.92	0.92	0.92	0.92
Percent Heavy Veh, %	2	2	2	2	2	2
Cap, veh/h	343	397	376	1296	1105	16
Arrive On Green	0.19	0.19	0.06	0.70	0.60	0.60
Sat Flow, veh/h	1774	1583	1774	1863	1831	27
Grp Volume(v), veh/h	128	348	79	612	0	819
Grp Sat Flow(s),veh/h/ln	1774	1583	1774	1863	0	1858
Q Serve(g_s), s	5.6	17.4	1.3	13.4	0.0	28.1
Cycle Q Clear(g_c), s	5.6	17.4	1.3	13.4	0.0	28.1
Prop In Lane	1.00	1.00	1.00			0.01
Lane Grp Cap(c), veh/h	343	397	376	1296	0	1122
V/C Ratio(X)	0.37	0.88	0.21	0.47	0.00	0.73
Avail Cap(c_a), veh/h	343	397	471	1296	0	1122
HCM Platoon Ratio	1.00	1.00	1.00	1.00	1.00	1.00
Upstream Filter(I)	1.00	1.00	1.00	1.00	0.00	1.00
Uniform Delay (d), s/veh	31.6	32.4	10.4	6.2	0.0	12.6
Incr Delay (d2), s/veh	0.7	19.3	0.3	1.2	0.0	4.2
Initial Q Delay(d3),s/veh	0.0	0.0	0.0	0.0	0.0	0.0
%ile BackOfQ(50%),veh/ln	2.8	17.2	0.8	7.2	0.0	15.6
LnGrp Delay(d),s/veh	32.2	51.6	10.7	7.4	0.0	16.8
LnGrp LOS	C	D	B	A		B
Approach Vol, veh/h	476			691	819	
Approach Delay, s/veh	46.4			7.8	16.8	
Approach LOS	D			A	B	

Timer	1	2	3	4	5	6	7	8
Assigned Phs		2		4	5	6		
Phs Duration (G+Y+Rc), s		69.1		20.9	8.3	60.8		
Change Period (Y+Rc), s		* 6.5		3.5	* 3.1	* 6.5		
Max Green Setting (Gmax), s		* 63		17.4	* 10	* 50		
Max Q Clear Time (g_c+I1), s		15.4		19.4	3.3	30.1		
Green Ext Time (p_c), s		13.4		0.0	0.1	9.6		

Intersection Summary	
HCM 2010 Ctrl Delay	20.8
HCM 2010 LOS	C

Notes

* HCM 2010 computational engine requires equal clearance times for the phases crossing the barrier.

Lane Group	EBL	EBR	NBL	NBT	SBT
Lane Group Flow (vph)	128	348	79	612	819
v/c Ratio	0.55	0.68	0.20	0.45	0.71
Control Delay	44.5	22.8	3.7	5.9	16.8
Queue Delay	0.0	0.0	0.0	0.0	0.0
Total Delay	44.5	22.8	3.7	5.9	16.8
Queue Length 50th (ft)	69	98	7	104	267
Queue Length 95th (ft)	119	170	20	199	#552
Internal Link Dist (ft)	770			717	290
Turn Bay Length (ft)		250	150		
Base Capacity (vph)	330	553	439	1353	1146
Starvation Cap Reductn	0	0	0	0	0
Spillback Cap Reductn	0	0	0	0	0
Storage Cap Reductn	0	0	0	0	0
Reduced v/c Ratio	0.39	0.63	0.18	0.45	0.71

Intersection Summary

95th percentile volume exceeds capacity, queue may be longer.
Queue shown is maximum after two cycles.

Movement	EBL	EBR	NBL	NBT	SBT	SBR
Lane Configurations						
Volume (veh/h)	178	133	334	932	824	17
Number	7	14	5	2	6	16
Initial Q (Qb), veh	0	0	0	0	0	0
Ped-Bike Adj(A_pbT)	1.00	1.00	1.00			1.00
Parking Bus, Adj	1.00	1.00	1.00	1.00	1.00	1.00
Adj Sat Flow, veh/h/ln	1863	1863	1863	1863	1863	1900
Adj Flow Rate, veh/h	182	136	341	951	841	17
Adj No. of Lanes	1	1	1	1	1	0
Peak Hour Factor	0.98	0.98	0.98	0.98	0.98	0.98
Percent Heavy Veh, %	2	2	2	2	2	2
Cap, veh/h	225	337	434	1419	1149	23
Arrive On Green	0.13	0.13	0.09	0.76	0.63	0.63
Sat Flow, veh/h	1774	1583	1774	1863	1819	37
Grp Volume(v), veh/h	182	136	341	951	0	858
Grp Sat Flow(s),veh/h/ln	1774	1583	1774	1863	0	1856
Q Serve(g_s), s	9.0	6.7	5.6	22.4	0.0	28.5
Cycle Q Clear(g_c), s	9.0	6.7	5.6	22.4	0.0	28.5
Prop In Lane	1.00	1.00	1.00			0.02
Lane Grp Cap(c), veh/h	225	337	434	1419	0	1172
V/C Ratio(X)	0.81	0.40	0.79	0.67	0.00	0.73
Avail Cap(c_a), veh/h	315	418	459	1419	0	1172
HCM Platoon Ratio	1.00	1.00	1.00	1.00	1.00	1.00
Upstream Filter(I)	1.00	1.00	1.00	1.00	0.00	1.00
Uniform Delay (d), s/veh	38.2	30.5	14.6	5.2	0.0	11.4
Incr Delay (d2), s/veh	10.1	0.8	8.3	2.5	0.0	4.1
Initial Q Delay(d3),s/veh	0.0	0.0	0.0	0.0	0.0	0.0
%ile BackOfQ(50%),veh/ln	5.0	6.1	6.5	12.1	0.0	15.6
LnGrp Delay(d),s/veh	48.3	31.3	23.0	7.7	0.0	15.4
LnGrp LOS	D	C	C	A		B
Approach Vol, veh/h	318			1292	858	
Approach Delay, s/veh	41.0			11.8	15.4	
Approach LOS	D			B	B	

Timer	1	2	3	4	5	6	7	8
Assigned Phs		2		4	5	6		
Phs Duration (G+Y+Rc), s		74.6		15.4	11.7	62.8		
Change Period (Y+Rc), s		6.0		4.0	4.0	6.0		
Max Green Setting (Gmax), s		64.0		16.0	9.0	51.0		
Max Q Clear Time (g_c+I1), s		24.4		11.0	7.6	30.5		
Green Ext Time (p_c), s		19.5		0.5	0.2	13.2		

Intersection Summary	
HCM 2010 Ctrl Delay	16.8
HCM 2010 LOS	B

Lane Group	EBL	EBR	NBL	NBT	SBT
Lane Group Flow (vph)	182	136	341	951	858
v/c Ratio	0.70	0.23	0.96	0.72	0.84
Control Delay	50.8	5.2	57.9	11.1	25.8
Queue Delay	0.0	0.0	0.0	0.0	0.0
Total Delay	50.8	5.2	57.9	11.1	25.8
Queue Length 50th (ft)	98	0	~107	262	376
Queue Length 95th (ft)	165	39	#196	438	#643
Internal Link Dist (ft)	770			717	290
Turn Bay Length (ft)		250	150		
Base Capacity (vph)	304	585	355	1327	1018
Starvation Cap Reductn	0	0	0	0	0
Spillback Cap Reductn	0	0	0	0	0
Storage Cap Reductn	0	0	0	0	0
Reduced v/c Ratio	0.60	0.23	0.96	0.72	0.84

Intersection Summary

~ Volume exceeds capacity, queue is theoretically infinite.
Queue shown is maximum after two cycles.

95th percentile volume exceeds capacity, queue may be longer.
Queue shown is maximum after two cycles.