Town of Simsbury

933 HOPMEADOW STREET SIMSBURY, CONNECTICUT 06070

Engineering Department

DATE: February 11, 2022

RE: BID NO. 22-02
Performing Arts Center ADA and Parking Improvements
Simsbury, Connecticut

This **Addendum No. 1** includes clarifications, revisions, and additions to the Invitation for Bid. Modifications are hereby made to the Invitation for Bid issued February 1, 2022, for the above-referenced project.

Project Manual

A. Replace page 13 of the Instruction to Bidders with the attached revision.
    a. Revisions have been made to section 37. Local Vendor Benefit.
    b. Revisions have been made to section 39. Town Supply and Protection to Trail Traffic.
    c. Revisions have been made to section 40. Phasing Requirements for the Project.
B. Replace page 4 of the Bid Proposal with the attached revision. “Signage” in the Lump Sum Base Bid Price has been revised to include “DECD Project Sign” as clarification.
C. Replace page 5 of the Bid Proposal with the attached revision. The existing Add Alternate has been revised as Add Alternate #1. Add Alternate #2 has been added to the bid solicitation for paved area along the north of the existing fence line to the east of the existing stage.
D. Replace page 4 and 16 of the General Conditions with the attached revision.
    a. Section 5.1 on Page 4 clarifies that the Contractor will provide line and grade by means of baseline and benchmarks, as provided by the Town of Simsbury.
    b. Section 4 on page 16 clarifies that all staking and surveying will be the responsibility of the Contractor and that a final as-built plan shall be submitted.
E. Remove section 6 in the Special Provisions.
F. Add attached Fine Milling of Bituminous Concrete (0 to 4 inches) technical specification to the project manual.
G. Add attached Flood Management Certification Approval to Appendix A.

Bid Plan Set

A. Replace sheets LA, SD-1, and SD-2 of the bid plan set dated February 1, 2022 with sheets LA, SD-1, and SD-2 of the bid plan set dated February 11, 2022. The following revisions have been made:
    a. Sheet LA
        i. Added 10’ wide bituminous concrete sidewalk to the east of the stage.
        ii. Hatched the area to be mulched at depth of 4”.

iii. Revised the relocated light pole by others and not included in contract.
iv. A scoring pattern has been added to the concrete pads.

b. Sheet SD-1
   i. The PVC fence detail has been revised to match language in the dumpster enclosure detail.

c. Sheet SD-2
   i. The concrete collar on the oil/water separator detail has been revised to reflect a concrete collar.
   ii. The infill material for the permeable pavers has been revised to a blend of No. 8 and No. 9 stone, and that the paver gaps shall be at a uniform width.

B. Disregard the Typical Light Pole Detail (with base). There are no new light poles or new bases proposed.
C. Disregard the "Remove/Relocate Existing Security Camera" callout on sheet GU of the bid plan set dated February 1, 2022. This removal/relocation will not be included in this bid scope.
D. Disregard note 11 of Keyed Notes on sheet ES-3 of the bid plan set dated February 1, 2022. The base and pole for P4 will remain.

Clarifications and General Information

A. Topographic Plan prepared by Denno Land Surveying & Consulting, LLC revised February 9, 2022 has been included. This plan provides benchmarks and swing ties.
B. The contractor should be aware that all work in the Town right of way of Iron Horse Boulevard shall be completed under a Street Excavation Permit issued by the Town of Simsbury Department of Engineering. No fees are required for this permit.
C. The contractor shall provide all necessary temporary fencing, barriers and signage around all work areas to protect the public from work areas and eliminate pedestrian traffic.
D. The contractor should be aware that an irrigation system exists to the north of the Performing Arts Center stage and irrigation heads will be marked out by the Town of Simsbury prior to the start of work.
E. The Town of Simsbury will provide all third-party testing for compaction and gradation tests.
F. A quote from ACME Lightning Rod, A Certified Woman Owned Business (WBE) was provided to the Town of Simsbury for the work on the Lightning Protection System. The use of this vendor is not required but is informational. Contact information is 860-306-2147.

THIS ENDS ADDENDUM NO. 1.

36. NON-DISCRIMINATION AND EQUAL EMPLOYMENT OPPORTUNITY

During the term of the Contract, the successful bidder agrees to be an equal employment opportunit y employer and will not discriminate as to race, color, creed, sex, national origin, marital status, physical or mental disability or any other protected classification under state and federal law.

37. LOCAL VENDOR BENEFIT

This section has been intentionally left blank.

38. WAGE RATES

The project is subject to State of Connecticut Prevailing Wage Rates.

39. TOWN SUPPLY AND PROTECTION TO TRAIL TRAFFIC

Storm drainage pipe materials and Tribeca Cobble Pavers specified in the drawings will be purchase directly by the Town of Simsbury due to the supply chain issues currently being experienced in the industry. These materials will be available to the contractor as soon as possible. Current delivery date for storm drainage piping is 8-12 weeks from the order date. Delivery for Tribeca Cobble Pavers is currently 2 weeks from the order date.

The Farmington Canal Heritage Trail is located along the frontage of the project site. The pedestrian a nd bicycle traffic along the trail shall be maintained and protected from construction activities at all times. Appropriate temporary signage should be posted at trail crossings warning the Trail users of Trucks Exiting the project site. The Trail may not be closed under any circumstances except for milling and paving of the driveway apron and force main installation.

40. PHASING REQUIREMENTS FOR THE PROJECT

The limited timeframe available to complete this project is an important requirement that will requir e some critical phasing to ensure delivery of the project on schedule. The phasing requires full restoration of the seating areas of the Performing Art Center (PAC) in advance of the substantial completion date to allow for full establishment of turf areas being disturbed. Contractor should approach the project with the requirement for turf establishment and proper rooting of sod specified for these impacted areas. Contractor should limit the area required for restoration through the use of equipment appropriate for these activities. Temporary irrigation should be provided if required to ensure the establishment of restored sodded area.

The owner has move forward with pre-purchase of long lead items that are associated with the current construction environment including storm drainage piping, fittings, and Tribeca Cobble Pavers to reduce possible delays with the delivery of these materials. This pre-purchasing does not include the oil/water separator, infill materials, bedding, excavation, precast concrete curbing or backfill.

Below is a phasing plan required for the project. The Owner will review and consider approval of alternative phasing plans that will meet the project schedule.

BID PRICES

INSTRUCTIONS: Bidder is to write his bid price in words in the blank spaces provided at the end of the description.

The Bidder is advised that the description is only a summary. The lump sum bid shall include all of the items as specified in detail in the contract document.

In case of discrepancies between amounts shown in words and amount shown in figures, BIDDER agrees that amounts shown in words will govern.

BID SCHEDULE

BIDDER'S NAME:

_____

PROPOSAL NUMBER:

BID NO. 22-02
Performing Arts Center ADA and Parking Improvements

LUMP SUM BASE BID PRICE – EXCAVATION, GRADING, AND PAVING OF NEW PARKING LOT WITH INSTALLATION OF ASSOCIATED CURBING, RELOCATION OF UTILITY POLES AND APPURTENANCES, CONSTRUCTION OF WATER QUALITY BASINS, PAVERS, OIL/WATER SEPARATOR, ASSOCIATED STORM DRAIN PIPES, DUMPSTER PAD AND ENCLOSURE, DECD PROJECT SIGN, LANDSCAPING AND MISCELLANEOUS UTILITY INSTALLATIONS.

Pursuant to and in full compliance with the solicitation, the undersigned bidder, having visited the site or property if applicable, and having thoroughly examined each and every document comprising the solicitation, including any addenda, hereby offers and agrees as follows:

To provide the products and/or services specified in, and upon the terms and conditions of, the solicitation for the total sum of _____ _____/100 Dollars (write out in words) ($_____).

Base Bid Breakdown

Site Preparation, Removals and Erosion Controls	$_____	L.S.
Earthwork and Formation of Subgrade	$_____	L.S.
Construction of Water Quality Basins	$ _____	L.S.
Installation of Subsurface Electrical Conduit	$ _____	L.S.
Installation of Subsurface Drainage Pipe & Structures	$ _____	L.S.
Remove and Replace Driveway Islands	$ _____	L.S.
Bituminous Concrete Sidewalks	$_____	L.S.

Paving and Curbing	$_____ L.S
Pavement Markings and Signage	$_____ L.S.
Final Restoration including Topsoil and Seed	$ _____ L.S.
All Other Work Items	$_____ L.S.
Total (should be same as above)	$_____ L.S.

ADD ALTERNATE BID ITEM #1:
LUMP SUM BID PRICE – MILL AND PAVE EXISTING DRIVEWAY AND PAVED PARKING LOT AREA, REMOVAL OF LANDSCAPED ISLANDS AND INSTALLATION OF GRANITE COBBLE ISLANDS, HANDICAPPED SIGNAGE, RESTRIPING OF PARKING LOT, CONCRETE SIDEWALKS AND PADS, AND INSTALLATION OF BIKE RACKS.

To provide the products and/or services specified in, and upon the terms and conditions of, the solicitation for the total sum of
_____ /100 Dollars

(write out in words) ($_____).

ADD ALTERNATE BID ITEM #2:
LUMP SUM BID PRICE – EXCAVATE, PLACE BASE MATERIAL, AND PAVE 10' WIDE PEDESTRIAN PATH ALONG FENCE LINE.

To provide the products and/or services specified in, and upon the terms and conditions of, the solicitation for the total sum of
_____ /100 Dollars

(write out in words) ($_____).

MANDATORY UNIT PRICES
Should the amount of improvements required be increased or decreased due to special considerations found at the site or because of a request of the Town of Simsbury, the undersigned agrees that the following supplemental UNIT PRICES will be the basic price in place for computing the EXTRA or CREDIT.

Each UNIT PRICE shall include all equipment, tools, labor, permits, fees, etc., incidental to the installation and completion of the work involved.

The amounts shown are net changes to the Contract for additional work and include the Contractor's and any Subcontractor's amounts for overhead and profit. For deleted work, the net credit to the Contract shall be 10% less.

All work is to be accomplished in accordance with applicable Sections of the Specifications and Site Details.

C.Y. = cubic yard	S.F. = square foot
S.Y. = square yard	V.F. = vertical foot
L.F. = linear foot	EA = Each

3.1 The Contractor must obtain all necessary permits and pay the fee for them. (Town portion of permit fees are waived.)

3.2 Should the Town be prevented or enjoined from proceeding with work either before or after the start of construction by reason of any litigation or other reason beyond the control of the Town, the Contractor shall not be entitled to or assert claim for damage by reason of said delay; but time for completion of the work will be extended to such reasonable time as the Owner may determine will compensate for time lost by such delay with such determination to be set forth in writing.

4. SUPERVISION

4.1 The Town will be represented at all times by the TOWN ENGINEER or an employee authorized by the TOWN ENGINEER to represent him/her; and the TOWN ENGINEER or his/her authorized representative shall have sole authority in the interpretation and execution of the contract.

4.2 The Contractor must have a competent Field Supervisor on the job during all working hours and notify the Town of his/her name and address in writing, and where he/she may be reached normally after working hours. In the event of the absence of the Field Supervisor, the Contractor must appoint a second in command to take responsible charge of the job. The actual performance of work and superintendence shall be performed by the Contractor but the owner shall, at all times, have access to the premises for the purpose of observing or inspecting the work performed by the Contractor.

5. LAYOUT

5.1 The Contractor will provide line and grade by means of baseline and benchmarks, as provided by the Town of Simsbury.

6. SITE WORK

6.1 The Contractor will be responsible for maintenance of adequate barricades, signs, and warning systems to protect the job and the public.

6.2 The Contractor shall properly protect all underground and above ground utilities from damage. No interruption shall be caused to any utility without the knowledge of the TOWN ENGINEER.

7. STANDARDS

public works contract with an employer without receiving sufficient evidence from the employer that he has workers' compensation insurance and a statement from the state treasurer that the employer does not owe the Second Injury and Compensation Assurance Fund any money.

2. The Town of Simsbury Engineering Department shall be notified at least five (5) days prior to beginning work.

3. Prior to beginning work, the "Call Before You Dig" service shall be notified by the Contractor by calling 811 or 1-800-922-4455, or, if the contractor is registered, by e-ticket entry, such that any underground utilities in the immediate vicinity of the work can be marked.

4. All staking and surveying will be the responsibility of the Contractor and a final as-built plan shall be submitted to the Town of Simsbury upon completion.

5. All road monuments and lot pins shall be PRESERVED. Cost of resetting will be back charged to the Contractor.

6. Sales and Use Tax Exempt Purchase Certificate/ The Contractor's attention is called to Regulation 18 as amended promulgated by the Sales and Use Tax Division of the State Tax Department, which provided for the Exemption of the sales and use tax on the purchase of such materials and supplies as are to be physically incorporated in and become a permanent part of the project being performed under this contract. The Contractor or Subcontractor shall furnish his suppliers with a completed certificate, in the prescribed form; a copy of which is attached to these specifications

7. Upon completion or termination of the work, the Contractor shall remove from the vicinity of the work all equipment and all temporary structures, waste materials and rubbish resulting from its operations, leaving the premises in a neat and acceptable condition. In the event of failure to do so, the same may be done by the Owner at the expense of the Contractor.

8. The Contractor shall pay for any broken utility lines, except where the utility company may be liable under the "Call Before You Dig" law. The Owner will only pay for relocations necessary to complete the work of this project.

9. In accordance with Executive Order 11246, the Contractor is obliged not to discriminate against any employee or applicant for employment because of race, color, creed, or national origin. This obligation not to discriminate in employment includes, but is not limited to, the following: hiring, placement, upgrading, transfer, demotion, recruitment, advertising, solicitation for employment training during employment, rates of pay or other forms of compensation, selection for training including apprenticeship, layoff, or termination.

10. For all new underground facilities installed after January 1, 1989 which is practicable and

ITEM #0406275A – FINE MILLING OF BITUMINOUS CONCRETE (0 TO 4 INCHES)

Description:

This work shall consist of the milling, removal, and disposal of existing bituminous concrete pavement.

Construction Methods:

The Contractor shall remove the bituminous concrete material using means acceptable to the Engineer. The pavement surface shall be removed to the line, grade, and existing or typical cross-section shown on the plans or as directed by the Engineer.

The bituminous concrete material shall be disposed of offsite by the Contractor at an approved disposal facility unless otherwise stated in the Contract.

Any milled surface, or portion thereof, that is exposed to traffic shall be paved within five (5) calendar days unless otherwise stated in the plans or Contract.

The equipment for milling the pavement surface shall be designed and built for milling bituminous concrete pavements. It shall be self propelled with sufficient power, traction, and stability to maintain depth and slope and shall be capable of removing the existing bituminous concrete pavement.

The milling machine shall be equipped with a built-in automatic grade averaging control system that can control the longitudinal profile and the transverse cross-slope to produce the specified results. The longitudinal controls shall be capable of operating from any longitudinal grade reference, including string line, contact ski (30 feet minimum), non-contact ski (20 feet minimum), or mobile string line (30 feet minimum). The transverse controls shall have an automatic system for controlling cross-slope at a given rate. The Engineer may waive the requirement for automatic grade or slope controls where the situation warrants such action.

The machine shall be able to provide a 0 to 4 inch deep cut in one pass. The rotary drum of the machine shall use carbide or diamond tipped tools spaced not more than $^{5}/_{16}$ inch apart. The forward speed of the milling machine shall be limited to no more than 45 feet/minute. The tools on the revolving cutting drum must be continually maintained and shall be replaced as warranted to provide a uniform pavement texture.

The machine shall be equipped with an integral pickup and conveying device to immediately remove material being milled from the surface of the roadway and discharge the millings into a truck, all in one operation. The machine shall also be equipped with a means of effectively limiting the amount of dust escaping from the milling and removal operation.

When milling smaller areas or areas where it is impractical to use the above described equipment, the use of a lesser equipped milling machine may be permitted when approved by the Engineer.

Protection shall be provided around existing catch basin inlets, manholes, utility valve boxes, and any similar structures. Any damage to such structures as a result of the milling operation is the Contractor's responsibility and shall be repaired at the Contractor's expense.

To prevent the infiltration of milled material into the storm drainage system, the Contractor shall take special care to prevent the milled material from falling into the inlet openings or inlet grates. Any milled material that has fallen into inlet openings or inlet grates shall be removed at the Contractor's expense.

Surface Tolerance:

The milled surface shall provide a satisfactory riding surface with a uniform textured appearance. The milled surface shall be free from gouges, longitudinal grooves and ridges, oil film, and other imperfections that are a result of defective equipment, improper use of equipment, or poor workmanship. The Contractor, under the direction of the Inspector, shall perform random spot-checks with a Contractor supplied ten-foot straightedge to verify surface tolerances at a minimum of five (5) locations per day. The variation of the top of two ridges from the testing edge of the straightedge, between any two ridge contact points, shall not exceed ¼ inch. The variation of the top of any ridge to the bottom of the groove adjacent to that ridge shall not exceed ¼ inch. Any unsatisfactory surfaces produced are the responsibility of the Contractor and shall be corrected at the Contractor's expense and to the satisfaction of the Engineer.

The depth of removal will be verified by taking measurements every 250 feet per each pass of the milling machine, or as directed by the Engineer. These depth measurements shall be used to monitor the average depth of removal.

Where a surface delamination between bituminous concrete layers or a surface delamination of bituminous concrete on Portland cement concrete causes a non-uniform texture to occur, the depth of milling shall be adjusted in small increments to a maximum of +/- ½ inch to eliminate the condition.

When removing bituminous concrete pavement entirely from an underlying Portland cement concrete pavement, all of the bituminous concrete pavement shall be removed leaving a uniform surface of Portland cement concrete, unless otherwise directed by the Engineer.

Any unsatisfactory surfaces produced by the milling operation are the Contractor's responsibility and shall be corrected at the Contractor's expense and to the satisfaction of the Engineer.

No vertical faces, transverse or longitudinal, shall be left exposed to traffic. This shall include roadway structures (catch basins, manholes, utility valve boxes, etc.). If any vertical face is formed in an area exposed to traffic, a temporary paved transition shall be established according to the requirements shown on the plans.

Roadway structures shall not have a vertical face of greater than one (1) inch exposed to traffic as a result of milling. All structures within the roadway that are exposed to traffic and greater than one (1) inch above the milled surface shall receive a transition.

All roadway structure edges and bituminous concrete tapers shall be clearly marked with fluorescent paint. The paint shall be maintained throughout the exposure to traffic.

The milling operation shall proceed in accordance with the requirements of the "Maintenance and Protection of Traffic" specifications, or other Contract requirements. The more stringent specification shall apply.

Prior to opening an area which has been milled to traffic, the pavement shall be thoroughly swept with a sweeper truck. The sweeper truck shall be equipped with a water tank and be capable of removing the millings and loose debris from the surface. The sweeper truck shall operate at a forward speed that allows for the maximum pickup of millings from the roadway surface. Other sweeping equipment may be provided in lieu of the sweeper truck where acceptable by the Engineer.

Any milled area that will not be exposed to live traffic for a minimum of 48 hours prior to paving shall require a vacuum sweeper truck in addition to, or in lieu of, mechanical sweeping. The vacuum sweeper truck shall have sufficient power and capacity to completely remove all millings from the roadway surface including any fine particles within the texture of the milled surface. Vacuum sweeper truck hose attachments shall be used to clean around pavement structures or areas that cannot be reached effectively by the main vacuum. Compressed air may be used in lieu of vacuum attachments if approved by the Engineer.

Connecticut Department of Energy and Environmental Protection License*

Flood Management Certification Approval

Licensee(s):	Connecticut Dept. of Economic & Community Development
Licensee Address(s):	450 Columbus Blvd., Suite 5 Hartford, CT 06103
License Number(s):	202112052-FM
Municipality:	Simsbury
Project Description:	Site improvements to the Simsbury Meadows Performing Arts Center
Project Address/Location:	22 Iron Horse Blvd.
Waters:	Farmington River
Authorizing CT Statute(s) and/or Federal Law:	CGS Section 25-68b to h
Applicable Regulations of CT State Agencies:	25-68h-1 to 3
Agency Contact:	Land & Water Resources Division, Bureau of Water Protection & Land Reuse, 860-424-3019
License Expiration:	Five (5) years from the date of issuance of this license.
Project Site Plan Set:	*" Performing Arts Center ADA and parking Improvements,"* Eight (8) sheets, prepared by SLR and dated October 15, 2021.
License Enclosures:	LWRD Compliance Certification Form; LWRD General Conditions; Site Plan Set; NDDB Determination Letter

Authorized Activities:

The Licensee is hereby authorized to conduct the following work as described in application # 202112052 and as depicted on any site plan sheets / sets cited herein:

1. Install and maintain erosion & sedimentation control measures.

*Connecticut's Uniform Administrative Procedure Act defines License to include, "*the whole or part of any agency permit, certificate, approval, registration, charter or similar form of permission required by law . . .*"

2. Regrade and pave bituminous concrete parking lot to replace existing gravel and lawn areas.
3. Construct ADA compliant walkways and seating areas.
4. Construct new stormwater management system including new water quality basins.
5. Install miscellaneous landscaping improvements.

Failure to comply with the terms and conditions of this license shall subject the Licensee and / or the Licensee's contractor(s) to enforcement actions and penalties as provided by law.

This license is subject to the following Terms and Conditions:

1. **License Enclosure(s) and Conditions.** The Licensee shall comply with all applicable terms and conditions as may be stipulated within the License Enclosure(s) listed above
2. **BMPs for the Protection of Frog and Mussel Species.** The Licensee shall conduct the work in accordance with the Natural Diversity Database determination letter # 202103526 dated March 19, 2021, from DEEP.

Issued under the authority of the Commissioner of Energy and Environmental Protection on:

February 4, 2022
Date

Brian P. Thompson
Division Director
Land & Water Resources Division

LWRD General Conditions

1. **Land Record Filing (for *Structures Dredging & Fill*, *Tidal Wetlands*, *Certificate of Permission*, and *Long Island Sound General Permit* Licenses only).** The Licensee shall file the Land Record Filing on the land records of the municipality in which the subject property is located not later than thirty (30) days after license issuance pursuant to Connecticut General Statutes (CGS) Section 22a-363g. A copy of the Notice with a stamp or other such proof of filing with the municipality shall be submitted to the Commissioner no later than sixty (60) days after license issuance. If a Land Record Filing form is not enclosed and the work site is not associated with an upland property, no filing is required.

2. **Contractor Notification.** The Licensee shall give a copy of the license and its attachments to the contractor(s) who will be carrying out the authorized activities prior to the start of construction and shall receive a written receipt for such copy, signed and dated by such contractor(s). The Licensee's contractor(s) shall conduct all operations at the site in full compliance with the license and, to the extent provided by law, may be held liable for any violation of the terms and conditions of the license. At the work site, the contractor(s) shall, whenever work is being performed, have on site and make available for inspection a copy of the license and the authorized plans.

3. **Work Commencement[1].** Not later than two (2) weeks prior to the commencement of any work authorized herein, the Licensee shall submit to the Commissioner, on the Work Commencement Form attached hereto, the name(s) and address(es) of all contractor(s) employed to conduct such work and the expected date for commencement and completion of such work, if any.
   - For water diversion activities authorized pursuant to 22a-377(c)-1 of the Regulations of Connecticut State Agencies, the Licensee shall also notify the Commissioner in writing two weeks prior to initiating the authorized diversion.
   - For emergency activities authorized pursuant Connecticut General Statutes Section 22a-6k, the Licensee shall notify the Commissioner, in writing, of activity commencement at least one (1) day prior to construction and of activity completion no later than five (5) days after conclusion.

4. **For Coastal Licenses Only - License Notice.** The Licensee shall post the first page of the License in a conspicuous place at the work area while the work authorized therein is undertaken.

5. **Unauthorized Activities.** Except as specifically authorized, no equipment or material, including but not limited to, fill, construction materials, excavated material or debris, shall be

[1] The Work Commencement condition and the need for a Work Commencement Form is not applicable to Flood Management Certification approvals.

deposited, placed or stored in any wetland or watercourse on or off-site. The Licensee may not conduct work within wetlands or watercourses other than as specifically authorized, unless otherwise authorized in writing by the Commissioner. Tidal wetlands means "wetland" as defined by section 22a-29 and "freshwater wetlands and watercourses" means "wetlands" and "watercourses" as defined by section 22a-38.

6. **Unconfined Instream Work.** Unless otherwise noted in a condition of the license, the following conditions apply to projects in non-coastal waters:
   - Unconfined instream work is limited to the period June 1 through September 30.
   - Confinement of a work area by cofferdam techniques using sand bag placement, sheet pile installation (vibratory method only), portadam, or similar confinement devices is allowed any time of the year. The removal of such confinement devices is allowed any time of the year.
   - Once a work area has been confined, in-water work within the confined area is allowed any time of the year.
   - The confinement technique used shall completely isolate and protect the confined area from all flowing water. The use of silt boom/curtain or similar technique as a means for confinement is prohibited.

7. **For State Actions Only - Material or Equipment Storage in the Floodplain.** Unless approved by a Flood Management Exemption, the storage of any materials at the site which are buoyant, hazardous, flammable, explosive, soluble, expansive, radioactive, or which could in the event of a flood be injurious to human, animal or plant life, below the elevation of the five-hundred (500) year flood is prohibited. Any other material or equipment stored at the site below said elevation by the Licensee or the Licensee's contractor must be firmly anchored, restrained or enclosed to prevent flotation. The quantity of fuel stored below such elevation for equipment used at the site shall not exceed the quantity of fuel that is expected to be used by such equipment in one day. In accordance with the licensee's Flood Contingency Plan, the Licensee shall remove equipment and materials from the floodplain during periods when flood warnings have been issued or are anticipated by a responsible federal, state or local agency. It shall be the Licensee's responsibility to obtain such warnings when flooding is anticipated.

8. **Temporary Hydraulic Facilities for Water Handling.** If not reviewed and approved as a part of the license application, temporary hydraulic facilities shall be designed by a qualified professional and in accordance with the *Connecticut Guidelines for Soil Erosion and Sediment Control*, the *2004 Connecticut Stormwater Quality Manual*, or the *Department of Transportation's ConnDOT Drainage Manual,* as applicable. Temporary hydraulic facilities may include channels, culverts or bridges which are required for haul roads, channel relocations, culvert installations, bridge construction, temporary roads, or detours.

9. **Excavated Materials.** Unless otherwise authorized, all excavated material shall be staged and managed in a manner which prevents additional impacts to wetlands and watercourses.

10. **Best Management Practices.** The Licensee shall not cause or allow pollution of any wetlands or watercourses, including pollution resulting from sedimentation and erosion. In constructing

or maintaining any authorized structure or facility or conducting any authorized activity, or in removing any such structure or facility, the Licensee shall employ best management practices to control storm water discharges, to prevent erosion and sedimentation, and to otherwise prevent pollution of wetlands and other waters of the State. For purposes of the license, "pollution" means "pollution" as that term is defined by CGS section 22a-423. Best Management Practices include, but are not limited, to practices identified in the *Connecticut Guidelines for Soil Erosion and Sediment Control* as revised, *2004 Connecticut Stormwater Quality Manual*, Department of Transportation's *ConnDOT Drainage Manual* as revised, and the Department of Transportation Standard Specifications as revised.

11. **In-Water Work Vessel Staging and Storage. (for Structures Dredging & Fill, Tidal *Wetlands*, *Certificate of Permission*, and *Long Island Sound General Permit* Licenses only).** For any barge, vessel, skiff or floating work platform ("work vessels") utilized in the execution of the work authorized herein, the Licensee shall ensure that such work vessels:
    - do not rest on, or come in contact with, the substrate at any time, unless specifically authorized in the license.
    - are not stored over intertidal flats, submerged aquatic vegetation or tidal wetland vegetation or in a location that interferes with navigation. In the event any work vessel is grounded, no dragging or prop dredging shall occur to free it.

12. **Work Site Restoration.** Upon completion of any authorized work, the Licensee shall restore all areas impacted by construction, or used as a staging area or accessway in connection with such work, to their condition prior to the commencement of such work.

13. **Inspection.** The Licensee shall allow any representative of the Commissioner to inspect the project location at reasonable times to ensure that work is being or has been conducted in accordance with the terms and conditions of this license.

14. **Change of Use. (Applies only if a use is specified within the License "*Project Description*")**
    a. The work specified in the license is authorized solely for the purpose set forth in the license. No change in purpose or use of the authorized work or facilities as set forth in the license may occur without the prior written approval of the Commissioner. The Licensee shall, prior to undertaking or allowing any change in use or purpose from that which is authorized by this license, request permission from the Commissioner for such change. Said request shall be in writing and shall describe the proposed change and the reason for the change.

    b. A change in the form of ownership of any structure authorized herein from a rental/lease commercial marina to a wholly-owned common interest community or dockominium may constitute a change in purpose as specified in paragraph (a) above.

15. **De Minimis Alteration.** The Licensee shall not deviate from the authorized activity without prior written approval from the Commissioner. The Licensee may request a de minimis change to any authorized structure, facility, or activity. A de minimis alteration means a change in the authorized design, construction or operation that individually and cumulatively has minimal additional environmental impact and does not substantively alter the project as authorized.

- For diversion activities authorized pursuant to 22a-377(c)-2 of the Regulations of Connecticut State Agencies, a de minimis alteration means an alteration which does not significantly increase the quantity of water diverted or significantly change the capacity to divert water.

16. **Extension Request.** The Licensee may request an extension of the license expiration date. Such request shall be in writing and shall be submitted to the Commissioner at least thirty (30) days prior to the license expiration. Such request shall describe the work done to date, what work still needs to be completed, and the reason for such extension. The Commissioner may extend the expiration date of this license for a period of up to one year, in order for the Licensee to complete the authorized activities. It shall be at the Commissioner's sole discretion to grant or deny such request. No more than three (3) one-year extensions will be granted under this license.

17. **Compliance Certification.** Not later than 90 days after completion of the authorized work, the Licensee shall prepare and submit to the Commissioner the attached Compliance Certification Form. Such Compliance Certification shall be completed, signed, and sealed by the Licensee and a Connecticut Licensed Design Professional. If non-compliance is indicated on the form, or the Commissioner has reason to believe the activities and/or structures were conducted in non-compliance with the license, the Commissioner may require the Licensee to submit as-built plans as a condition of this license.

18. **Maintenance.** The Licensee shall maintain all authorized structures or work in optimal condition or shall remove such structures or facility and restore the affected waters to their pre-work condition. Any such maintenance or removal activity shall be conducted in accordance with applicable law and any additional approvals required by law.

19. **No Work After License Expiration.** Work conducted after the license expiration date is a violation of the license and may subject the licensee to enforcement action, including penalties, as provided by law.

20. **License Transfer.** The license is not transferable without prior written authorization of the Commissioner. A request to transfer a license shall be submitted in writing and shall describe the proposed transfer and the reason for such transfer. The Licensee's obligations under the license shall not be affected by the passage of title to the license site to any other person or municipality until such time as a transfer is approved by the Commissioner.

21. **Document Submission.** Any document required to be submitted to the Commissioner under the license or any contact required to be made with the Commissioner shall, unless otherwise specified in writing by the Commissioner, be directed to:

    Regulatory Section
    Land & Water Resources Division
    Department of Energy and Environmental Protection
    79 Elm Street
    Hartford, Connecticut 06106-5127
    860-424-3019

22. **Date of Document Submission.** The date of submission to the Commissioner of any document required by the license shall be the date such document is received by the Commissioner. The date of any notice by the Commissioner under the license, including but not limited to notice of approval or disapproval of any document or other action, shall be the date such notice is personally delivered or the date three (3) days after it is mailed by the Commissioner, whichever is earlier. Except as otherwise specified in the license, the word "day" as used in the license means calendar day. Any document or action which is required by the license to be submitted or performed by a date which falls on a Saturday, Sunday or a Connecticut or federal holiday shall be submitted or performed on or before the next day which is not a Saturday, Sunday, or a Connecticut or federal holiday.

23. **Certification of Documents.** Any document, including but not limited to any notice, which is required to be submitted to the Commissioner under the license shall be signed by the Licensee and by the individual or individuals responsible for actually preparing such document, each of whom shall certify in writing as follows: "I have personally examined and am familiar with the information submitted in this document and all attachments and certify that based on reasonable investigation, including my inquiry of those individuals responsible for obtaining the information, the submitted information is true, accurate and complete to the best of my knowledge and belief, and I understand that any false statement made in this document or its attachments may be punishable as a criminal offense."

24. **Accuracy of Documentation.** In evaluating the application for the license, the Commissioner has relied on information and data provided by the Licensee and on the Licensee's representations concerning site conditions, design specifications and the proposed work, including but not limited to representations concerning the commercial, public or private nature of the work or structures, the water-dependency of said work or structures, its availability for access by the general public, and the ownership of regulated structures or filled areas. If such information proves to be false, deceptive, incomplete or inaccurate, the license may be modified, suspended or revoked, and any unauthorized activities may be subject to enforcement action.

25. **Limits of Liability.** In granting the license, the Commissioner has relied on all representations of the Licensee, including information and data provided in support of the Licensee's application. Neither the Licensee's representations nor the issuance of the license shall constitute an assurance by the Commissioner as to the structural integrity, the engineering feasibility or the efficacy of such design.

26. **Reporting of Violations.** In the event that the Licensee becomes aware that they did not or may not comply, or did not or may not comply on time, with any provision of this license or of any document incorporated into the license, the Licensee shall immediately notify the agency contact specified within the license and shall take all reasonable steps to ensure that any noncompliance or delay is avoided or, if unavoidable, is minimized to the greatest extent possible. In so notifying the agency contact, the Licensee shall provide, for the agency's review and written approval, a report including the following information:

    a. the provision(s) of the license that has been violated;

    b. the date and time the violation(s) was first observed and by whom;

c. the cause of the violation(s), if known;

d. if the violation(s) has ceased, the duration of the violation(s) and the exact date(s) and times(s) it was corrected;

e. if the violation(s) has not ceased, the anticipated date when it will be corrected;

f. steps taken and steps planned to prevent a reoccurrence of the violation(s) and the date(s) such steps were implemented or will be implemented; and

g. the signatures of the Licensee and of the individual(s) responsible for actually preparing such report.

If the violation occurs outside of normal business hours, the Licensee shall contact the Department of Energy and Environmental Protection Emergency Dispatch at 860-424-3333. The Licensee shall comply with any dates which may be approved in writing by the Commissioner.

27. Revocation/Suspension/Modification. The license may be revoked, suspended, or modified in accordance with applicable law.

28. Other Required Approvals. License issuance does not relieve the Licensee of their obligations to obtain any other approvals required by applicable federal, state and local law.

29. Rights. The license is subject to and does not derogate any present or future property rights or powers of the State of Connecticut, and conveys no property rights in real estate or material nor any exclusive privileges, and is further subject to any and all public and private rights and to any federal, state or local laws or regulations pertinent to the property or activity affected hereby.

30. Condition Conflicts. In the case where a project specific special condition listed on the license differs from, or conflicts with, one of the general conditions listed herein, the project specific special condition language shall prevail. It is the licensee's responsibility to contact the agency contact person listed on the license for clarification if needed prior to conducting any further regulated activities.

PERFORMING ARTS CENTER
ADA AND PARKING IMPROVEMENTS

22 IRON HORSE BOULEVARD
MAP H09, BLOCK 226, LOTS 002/003A/004
SIMSBURY, CONNECTICUT

SLR #11613.00025
OCTOBER 15, 2021

GENERAL NOTES

1. PROPERTY AND TOPOGRAPHIC INFORMATION IS COMPILED FROM A MAP TITLED "TOPOGRAPHIC PLAN, PREPARED FOR TOWN OF SIMSBURY, IRON HORSE BOULEVARD, SIMSBURY, CONNECTICUT", SCALE: 1"=30', DATE: OCTOBER 16, 2020, PREPARED BY: DENNIO LAND SURVEYING & CONSULTING LLC.
2. NORTH ARROW, BEARINGS AND COORDINATES ARE BASED UPON THE CONNECTICUT COORDINATE SYSTEM (NAD 1983). ELEVATIONS, CONTOURS AND BENCH MARK ARE BASED UPON (NAVD 1988)
3. INFORMATION REGARDING THE LOCATION OF EXISTING UTILITIES HAS BEEN BASED UPON AVAILABLE INFORMATION AND MAY BE INCOMPLETE, AND WHERE SHOWN SHOULD BE CONSIDERED APPROXIMATE. THE LOCATION OF ALL EXISTING UTILITIES SHOULD BE CONFIRMED PRIOR TO BEGINNING CONSTRUCTION. CALL "CALL BEFORE YOU DIG", 1-800-922-4455. ALL UTILITY LOCATIONS THAT DO NOT MATCH THE VERTICAL OR HORIZONTAL CONTROL SHOWN ON THE PLANS SHALL IMMEDIATELY BE BROUGHT TO THE ATTENTION OF THE ENGINEER FOR RESOLUTION.
4. SLR INTERNATIONAL, INC. ACCEPTS NO RESPONSIBILITY FOR THE ACCURACY OF MAPS AND DATA WHICH HAVE BEEN SUPPLIED BY OTHERS.
5. ALL UTILITY SERVICES ARE TO BE UNDERGROUND. THE EXACT LOCATION, MEANS OF CONSTRUCTION, AND SIZE OF ELECTRIC, TELEPHONE, AND CABLE TELEVISION ARE TO BE DETERMINED BY THE RESPECTIVE UTILITY COMPANIES.
6. ALL DIMENSIONS AND ELEVATIONS SHALL BE VERIFIED IN THE FIELD PRIOR TO CONSTRUCTION. ANY DISCREPANCIES SHALL BE BROUGHT TO THE ATTENTION OF THE ENGINEER.
7. SEDIMENT AND EROSION CONTROL MEASURES AS DEPICTED ON THESE PLANS AND DESCRIBED WITHIN THE SEDIMENT AND EROSION CONTROL NARRATIVE SHALL BE IMPLEMENTED AND MAINTAINED UNTIL PERMANENT COVER AND STABILIZATION IS ESTABLISHED. ALL SEDIMENT AND EROSION CONTROL MEASURES SHALL CONFORM TO THE "GUIDELINES FOR SOIL EROSION AND SEDIMENT CONTROL, CONNECTICUT - 2002". AND IN ALL CASES BEST MANAGEMENT PRACTICES SHALL PREVAIL
8. ALL DISTURBED AREAS SHALL RECEIVE A MINIMUM OF 6" TOPSOIL, AND BE SEEDED WITH GRASS, AS SHOWN ON THE PLANS.
9. ALL PROPOSED CONTOURS AND SPOT ELEVATIONS INDICATE FINISHED GRADE.
10. ALL CONSTRUCTION MATERIALS AND METHODS SHALL CONFORM TO THE TOWN OF SIMSBURY REQUIREMENTS AND TO THE APPLICABLE SECTIONS OF THE STATE OF CONNECTICUT DEPARTMENT OF TRANSPORTATION STANDARD SPECIFICATIONS FOR ROADS, BRIDGES, AND INCIDENTAL CONSTRUCTION, FORM 818 AND ADDENDUMS.
11. THE PLANS REQUIRE A CONTRACTOR'S WORKING KNOWLEDGE OF LOCAL, MUNICIPAL, WATER AUTHORITY, AND STATE CODES FOR UTILITY SYSTEMS. ANY CONFLICTS BETWEEN MATERIALS AND LOCATIONS SHOWN, AND LOCAL REQUIREMENTS SHALL BE BROUGHT TO THE ATTENTION OF THE ENGINEER PRIOR TO THE EXECUTION OF WORK. THE ENGINEER WILL NOT BE HELD LIABLE FOR COSTS INCURRED TO IMPLEMENT OR CORRECT WORK WHICH DOES NOT CONFORM TO LOCAL CODE.
12. ALL FUEL, OIL, PAINT, OR OTHER HAZARDOUS MATERIALS USED DURING CONSTRUCTION SHOULD BE STORED IN A SECONDARY CONTAINER AND REMOVED TO A LOCKED INDOOR AREA WITH AN IMPERVIOUS FLOOR DURING NON-WORK HOURS.
13. COMPLIANCE WITH THE PERMIT CONDITIONS IS THE RESPONSIBILITY OF BOTH THE CONTRACTOR AND THE PERMITTEE.

EROSION CONTROL NOTES
CONTRACTOR RESPONSIBILITIES

1. SEDIMENT AND EROSION CONTROLS SHALL BE INSPECTED AT LEAST ONCE A WEEK AND WITHIN 24 HOURS OF THE END OF A STORM WITH A RAINFALL AMOUNT OF 0.5 INCH OR GREATER. A LOG OF SUCH INSPECTIONS SHALL BE MAINTAINED AT THE SITE.
2. THE SEDIMENT AND EROSION CONTROL PLAN SHALL BE MODIFIED BY THE CONTRACTOR AT THE DIRECTION OF THE ENGINEER AND THE TOWN'S DESIGNATED REPRESENTATIVE AS NECESSITATED BY CHANGING SITE CONDITIONS
3. INSPECTION OF THE SITE FOR EROSION SHALL CONTINUE FOR A PERIOD OF THREE MONTHS AFTER COMPLETION WHEN RAINFALLS OF ONE INCH OR MORE OCCUR.
4. ALL DEWATERING WASTE WATERS SHALL BE DISCHARGED IN A MANNER WHICH MINIMIZES THE DISCOLORATION OF THE RECEIVING WATERS.
5. THE SITE SHOULD BE KEPT CLEAN OF LOOSE DEBRIS, LITTER, AND BUILDING MATERIALS SUCH THAT NONE OF THE ABOVE ENTER WATERS OR WETLANDS.
6. A COPY OF ALL PLANS AND REVISIONS, AND THE SEDIMENT AND EROSION CONTROL PLAN SHALL BE MAINTAINED ON-SITE AT ALL TIMES DURING CONSTRUCTION.
7. ALL CATCH BASIN SUMPS SHOULD BE INSPECTED AFTER CONSTRUCTION COMPLETION AND SEDIMENT REMOVED. THE SEDIMENT SHALL BE DISPOSED OF IN AN APPROVED LOCATION.

PARKING DATA	EXISTING	PROPOSED
STANDARD SPACES	182	130
ADA STANDARD ACCESSIBLE PARKING SPACES	3	19
ADA VAN ACCESSIBLE PARKING SPACES	0	5
TOTAL PARKING	185	154

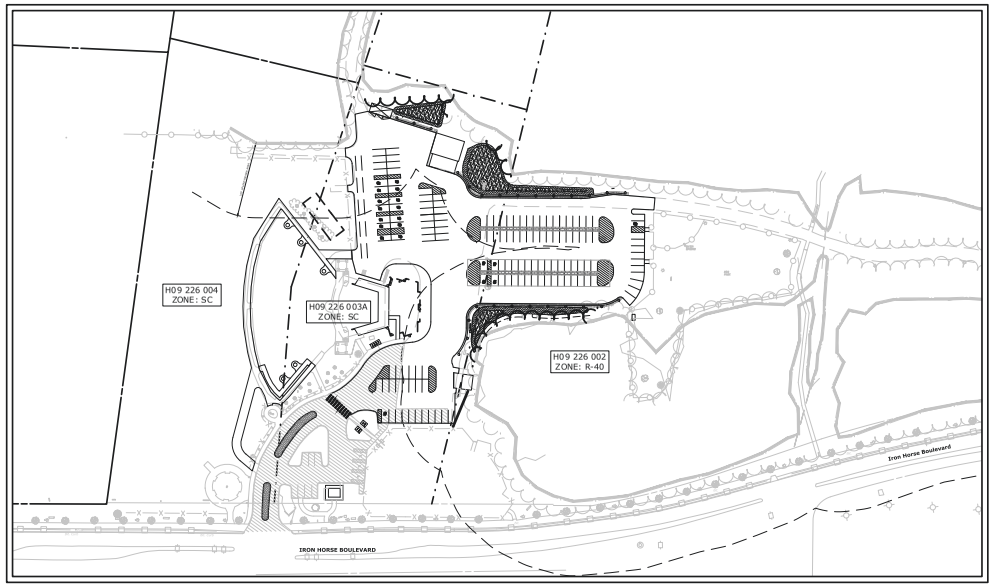

PROJECT SITE VICINITY MAP:

0' 40' 80'
SCALE 1" = 80'

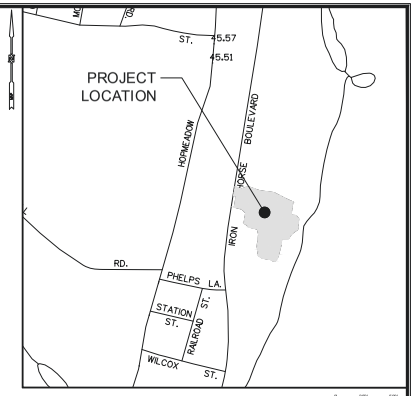

LOCATION MAP:

0 200' 400'
SCALE 1" = 200'

LEGEND

EXISTING		PROPOSED
	STREET LINE	
	PROPERTY LINE	
	SETBACK LINE	
70	MAJOR CONTOUR	100
68	MINOR CONTOUR	98
× 70.5	SPOT GRADE	+ 70.5
	TREE/ SHRUB	
	SITE LIGHT	
WV	WATER VALVE	WV
GV	GAS VALVE	GV
	CATCH BASIN	
	MANHOLE/YARD DRAIN	
	SANITARY SEWER W/MANHOLE	SAN
	STORM DRAIN	
W	WATER MAIN	W
G	GAS MAIN	G
E	ELECTRIC LINE	E
ETC	ELECTRIC, TELEPHONE, CABLE	ETC
	UTILITY POLE	
	TRAFFIC SIGN	
	IRON PIPE	
	MONUMENT	
	EDGE OF PAVEMENT W/CURB	
	GUARD RAIL	
	CHAIN LINK FENCE	
	WATERCOURSE	
	WETLAND	
	PERMANENT ANIMEX WILDLIFE FENCING	

PREPARED FOR:

TOWN OF SIMSBURY
933 HOPMEADOW STREET
SIMSBURY, CT 06070

PREPARED BY:

SLR
99 REALTY DRIVE
CHESHIRE, CT 06410
203.271.1773
SLRCONSULTING.COM

STATE OF CONNECTICUT
THOMAS L. DOLL
419979
LICENSED
PROFESSIONAL ENGINEER

LIST OF DRAWINGS

NO.	NAME	TITLE
01	--	TITLE SHEET
02	EX	EXISTING CONDITIONS
03	LA	SITE PLAN - LAYOUT AND LANDSCAPING
04	GU	SITE PLAN - GRADING AND UTILITIES
05	SE-1	SEDIMENT AND EROSION CONTROL PLAN
06	SE-2	SEDIMENT AND EROSION CONTROL SPECIFICATIONS AND DETAILS
07	SD-1	SITE DETAILS
08	SD-2	SITE DETAILS

811
Know what's below.
Call before you dig.
www.cbyd.com

Copyright SLR International Corporation - 2021

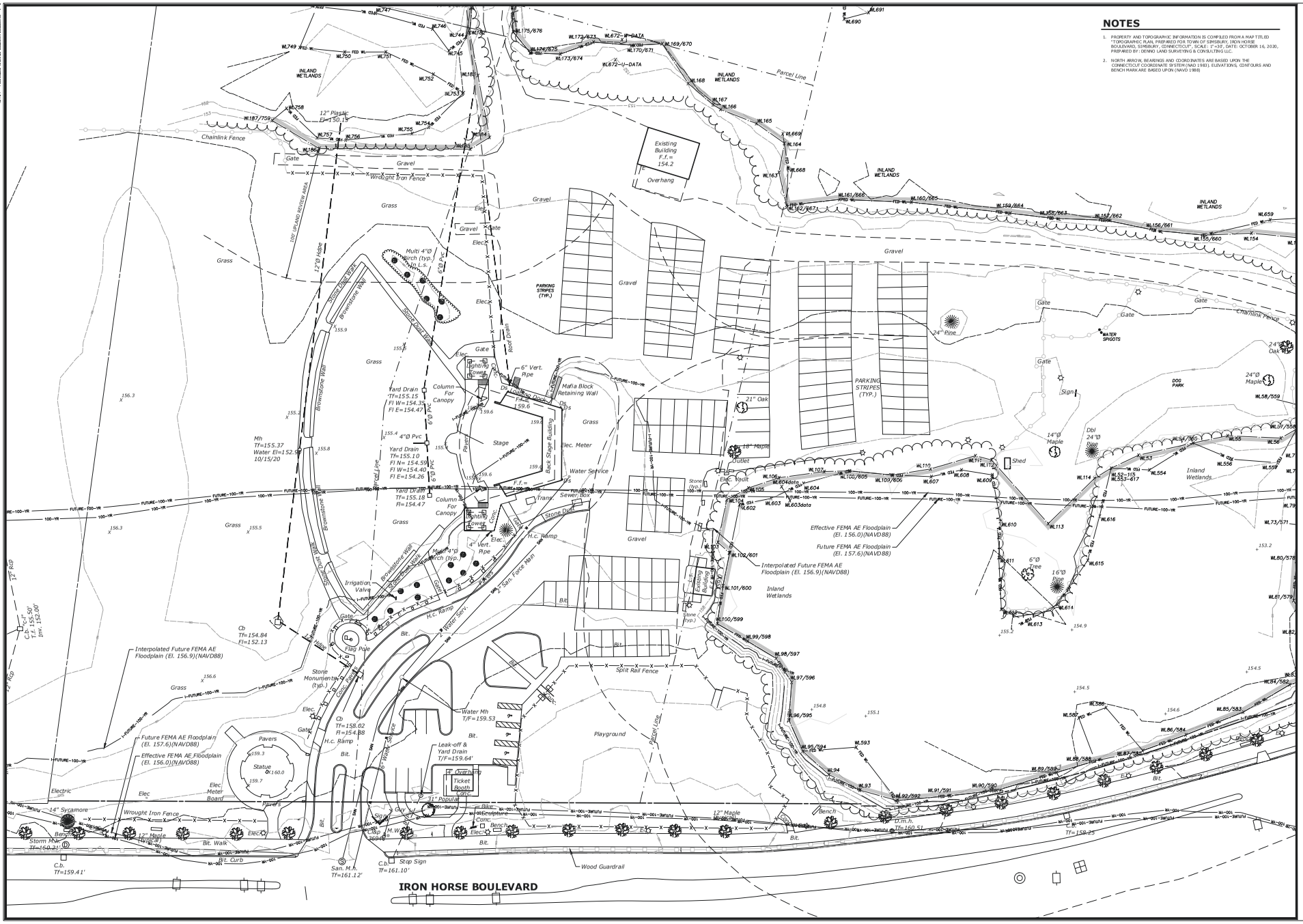
IRON HORSE BOULEVARD
Existing Building F.f.= 154.2
Overhang
Parcel Line
INLAND WETLANDS
Chainlink Fence
Wrought Iron Fence
Gravel
Grass
Playground
Split Rail Fence
Stone Dust Walk
Brownstone Wall
Stone Dust Path
Bit. Walk
Bit. Curb
Bit.
Pavers
Flag Pole
Statue
Stone Monumental (typ.)
Irrigation Valve
Water Mh T/F=159.53
Leak-off & Yard Drain T/F=159.64'
Ticket Booth
Stage
Back Stage Building
Mafia Block Retaining Wall
Column For Canopy
Yard Drain
Multi 4"Ø Birch (typ.)
Interpolated Future FEMA AE Floodplain (El. 156.9)(NAVD88)
Future FEMA AE Floodplain (El. 157.6)(NAVD88)
Effective FEMA AE Floodplain (El. 156.0)(NAVD88)
Wood Guardrail
Stop Sign
Water Service
Sewer Box
Elec. Meter
Elec. Vault
Inland Wetlands
Shed
DOG PARK
PARKING STRIPES (TYP.)
WATER SPIGOTS
Playground
Bench
Sculpture
Bike Rack
Stone (typ.)
Existing Building
Sign
Gate
Chainlink Fence
Wrought Iron Fence
14" Sycamore
12" Maple
Storm Mh
C.b. Tf=159.41'
San. M.h. Tf=161.12'
C.b. Tf=161.10'
C.b. Tf=158.25'
Tf=160.51
Tf=154.88
Tf=158.02
Tf=154.84
Fl=152.13
Mh Tf=155.37 Water El=152.59 10/15/20
Yard Drain Tf=155.15 Fl W=154.35 Fl E=154.47
Yard Drain Tf=155.10 Fl N= 154.59 Fl W=154.40 Fl E=154.26
Yard Drain Tf=155.18 Fl=154.47
Lighting Tower
6" Vert. Pipe
4" Vert. Pipe
H.c. Ramp
Trans.
Elec.
Meter Board
Electric
Water Sprs.
Sign Force Main
Effective FEMA AE Floodplain (El. 157.6)(NAVD88)
Future FEMA AE Floodplain (El. 156.0)(NAVD88)
Parcel Line
Chainlink Fence
Gate
Grass
Gravel
Bit.
Elec.
Conc.
Stone (typ.)
Existing Building
Overhang
Ticket Booth
Bench
Sculpture
Bike Rack
Stone (typ.)

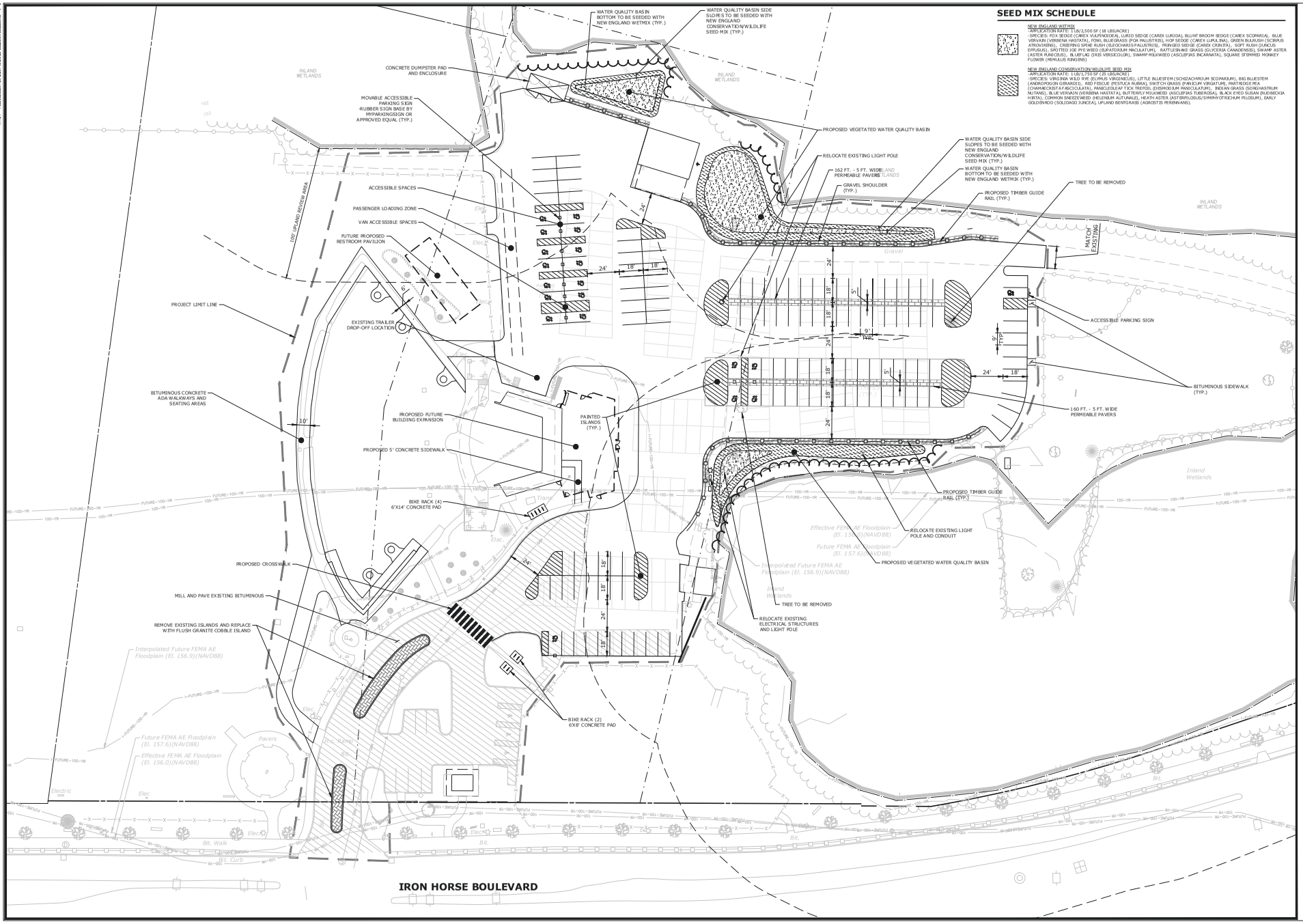

SLR
99 REALTY DRIVE
CHESHIRE, CT 06410
203.271.1773
SLRCONSULTING.COM

DESCRIPTION	DATE	BY

SITE PLAN - LAYOUT AND LANDSCAPING

SIMSBURY MEADOWS PERFORMING ARTS CENTER
ADA AND PARKING IMPROVEMENTS
22 IRON HORSE BOULEVARD
SIMSBURY, CONNECTICUT

AWG	AWG	TD
DESIGNED	DRAWN	CHECKED

SCALE: 1"=30'

DATE: OCTOBER 15, 2021

PROJECT NO.: 116 13.00025

SHEET NO.: 03 OF 08

SHEET NAME: LA

Copyright SLR International Corporation - 2021

STORMWATER MANAGEMENT OPERATION AND MAINTENANCE PLAN

1. RECOMMENDED FREQUENCY OF SERVICE:
AS FURTHER DEFINED BELOW, ALL STORMWATER COMPONENTS SHOULD BE CHECKED ON A PERIODIC BASIS AND KEPT IN FULL WORKING ORDER. ULTIMATELY, THE REQUIRED FREQUENCY OF INSPECTION AND SERVICE WILL DEPEND ON RUNOFF QUANTITIES, POLLUTANT LOADING, AND CLOGGING DUE TO DEBRIS. AT A MINIMUM, WE RECOMMEND THAT ALL STORMWATER COMPONENTS BE INSPECTED AND SERVICED TWICE PER YEAR, ONCE BEFORE WINTER BEGINS AND ONCE DURING SPRING CLEANUP.

2. SERVICE PROCEDURES:
2.1. STORM DRAINAGE PIPING:
a. ALL STORM DRAINAGE PIPING SHALL BE COMPLETELY FLUSHED OF DEBRIS AND ACCUMULATED SEDIMENT AT THE COMPLETION OF CONSTRUCTION.
b. UNLESS SYSTEM PERFORMANCE INDICATES DEGRADATION OF PIPING, COMPREHENSIVE VIDEO INSPECTION OF STORM DRAINAGE PIPING SHALL OCCUR ONCE EVERY TEN YEARS.
c. ANY ADDITIONAL MAINTENANCE REQUIRED PER THE MANUFACTURER'S SPECIFICATIONS SHALL ALSO BE COMPLETED.
2.2. WATER QUALITY BASIN:
a. THE WATER QUALITY SWALE SHALL BE CLEANED OF DEBRIS AND SEDIMENTS UPON THE COMPLETION OF CONSTRUCTION.
b. THE WATER QUALITY SWALE SHALL BE VISUALLY INSPECTED ON A MONTHLY BASIS FOR THE FIRST 6 MONTHS. INSPECTIONS SHOULD FOLLOW TWICE PER YEAR (SPRING AND FALL) AND AFTER MAJOR STORM EVENTS TO ENSURE THAT THE STRUCTURE OPERATES IN THE MANNER AS ORIGINALLY INTENDED.
c. SEDIMENT BUILD UP SHOULD BE REMOVED FROM THE INITIAL SEDIMENT FOREBAY WHEN SEDIMENTS REACH 6 TO 8 INCHES IN DEPTH. SEDIMENTS SHOULD BE DISPOSED OF IN AN APPROPRIATE OFFSITE LOCATION.
d. THE WATER QUALITY SWALE SHOULD BE MOWED AT LEAST TWICE AN YEAR AND SHOULD NOT BE PERFORMED WHEN THE GROUND IS SOFT.
e. DEBRIS AND LITTER MAY ACCUMULATE NEAR THE DISCHARGE PIPE INTO THE SWALE AND FLARED END SECTION. THEY SHOULD BE REMOVED DURING THE REGULAR MOWING OPERATIONS.
f. THE VEGETATION ALONG THE SWALE BOTTOM AND SIDES SHALL BE INSPECTED FOR EROSION AND REPAIRED AS NECESSARY. ALL OF SUCH INSPECTIONS MUST BE MAINTAINED BY THE OWNER.
g. ALL DEAD PLANTS SHALL BE REPLACED AND ANY NECESSARY PRUNING OF VEGETATION IDENTIFIED DURING INSPECTIONS SHALL BE COMPLETED.
3. DISPOSAL OF DEBRIS AND SEDIMENT:
ALL DEBRIS AND SEDIMENT REMOVED FROM THE STORMWATER STRUCTURES AND WATER QUALITY SWALE SHALL BE DISPOSED OF LEGALLY. THERE SHALL BE NO DUMPING OF SILT OR DEBRIS INTO OR IN PROXIMITY TO ANY INLAND WETLANDS.
4. MAINTENANCE RECORDS:
THE OWNER(S) MUST MAINTAIN ALL RECORDS (LOGS, INVOICES, REPORTS, DATA, ETC.) AND HAVE ALWAYS THEM READILY AVAILABLE FOR INSPECTION.

FLOODPLAIN CUT/FILL

TOTAL CUT VOLUME: ±903 CUBIC YARDS
TOTAL FILL VOLUME: ±43 CUBIC YARDS
NET VOLUME: ±860 CUBIC YARDS (CUT)

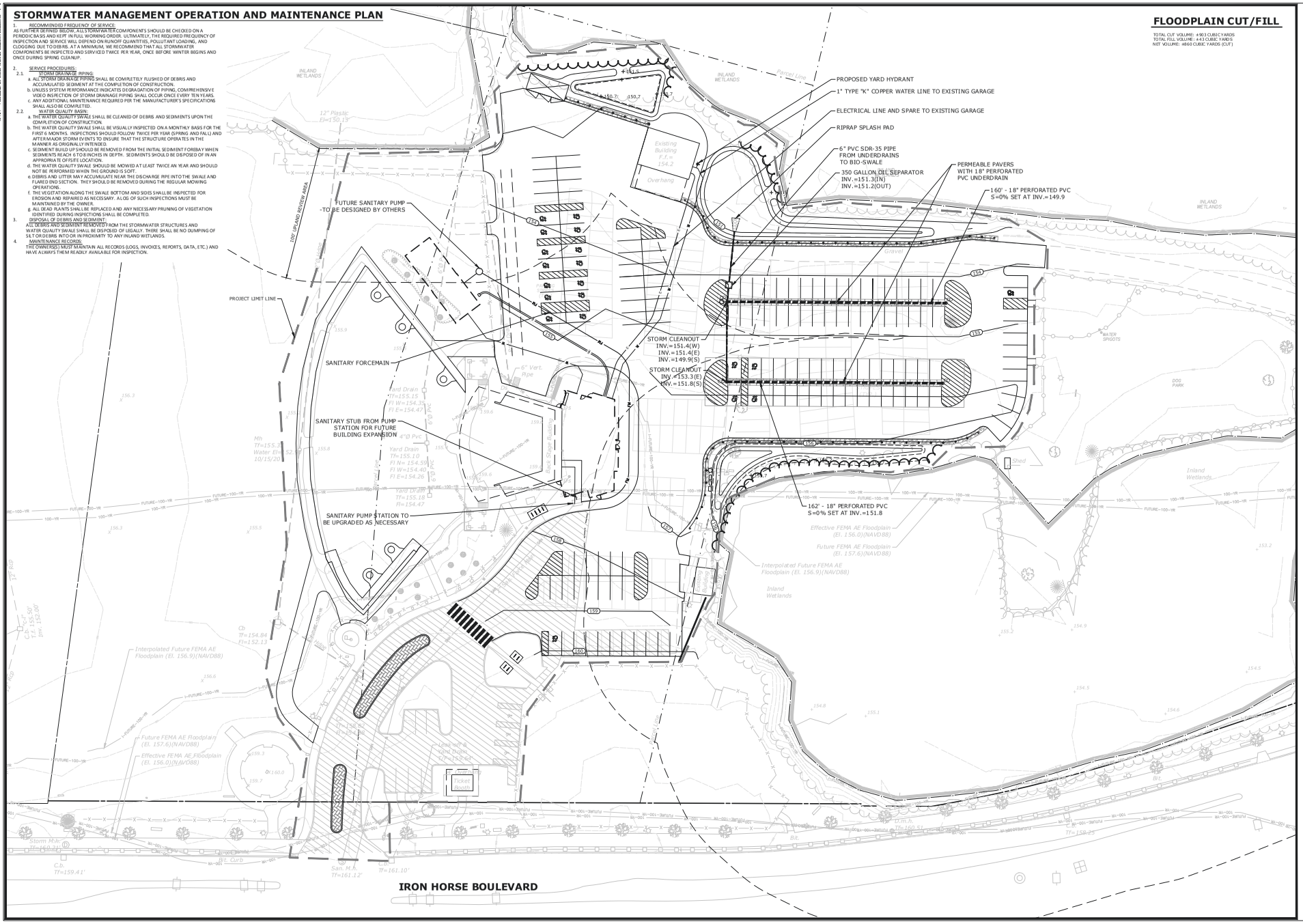

SLR
99 REALTY DRIVE
CHESHIRE, CT 06410
203.271.1773
SLRCONSULTING.COM

DESCRIPTION	DATE	BY

SITE PLAN - GRADING AND UTILITIES
SIMSBURY MEADOWS PERFORMING ARTS CENTER
ADA AND PARKING IMPROVEMENTS
22 IRON HORSE BOULEVARD
SIMSBURY, CONNECTICUT

AWG	AWG	TD
DESIGNED	DRAWN	CHECKED

SCALE: 1"=30'
DATE: OCTOBER 15, 2021
PROJECT NO.: 11613.00025
SHEET NO.: 04 OF 08
SHEET NAME: GU

Copyright SLR International Corporation - 2021

NDDB PROTECTION STRATEGIES FOR EASTERN HOGNOSE SNAKE AND NOTHERN LEOPARD FROG

1. A QUALIFIED HERPETOLOGIST SHALL SURVEY/SWEEP THE AREAS ALONG THE LIMITS OF DISTURBANCE PRIOR TO ANY CONSTRUCTION. THIS SHALL OCCUR IMMEDIATELY PRIOR TO (WITHIN 24 HOURS) THEN IMMEDIATELY FOLLOWING THE INSTALLATION OF THE EROSION AND SEDIMENTATION CONTROL BARRIERS, IF THIS WORK IS TO BE CONDUCTED FROM APRIL TO NOVEMBER WHEN SPECIES ARE NON-DORMANT.
2. A QUALIFIED HERPETOLOGIST SHALL BE HIRED TO BE ON SITE TO ENSURE THESE PROTECTION GUIDELINES REMAIN IN EFFECT AND INCLUDE ANY SNAKES FROM BEING RUN OVER WHEN MOVING HEAVY EQUIPMENT.
3. EXCLUSIONARY PRACTICES WILL BE REQUIRED TO PREVENT ANY FROG OR SNAKE ACCESS INTO CONSTRUCTION AREAS AND WILL CONSIST OF TEMPORARY SILT FENCING DURING CONSTRUCTION. THESE MEASURES WILL NEED TO BE INSTALLED AT THE LIMITS OF DISTURBANCE, AS INDICATED ON SITE PLANS.
4. EXCLUSIONARY FENCING MUST BE AT LEAST 20 IN TALL AND MUST BE SECURED TO AND REMAIN IN CONTACT WITH THE GROUND AND BE REGULARLY MAINTAINED (AT LEAST BI-WEEKLY AND AFTER MAJOR WEATHER EVENTS) TO SECURE ANY GAPS OR OPENINGS AT GROUND LEVEL THAT MAY LET AN IMAL PASS THROUGH. FENCING SHOULD BE INSTALLED WITH STAKES FACING IN TOWARD S THE CONSTRUCTION AREA TO REDUCE CLIMBING SURFACES FOR REPTILES. DO NOT USE PLASTIC WEB OR NETTED SILT FENCE.
5. ALL STAGING AND STORAGE AREAS, OUTSIDE OF PREVIOUSLY PAVED LOCATIONS, REGARDLESS OF THE DURATION OF TIME THEY WILL BE UTILIZED, MUST BE REVIEWED TO REMOVE INDIVIDUALS AND EXCLUDE THEM FROM RE-ENTRY.
6. ALL CONSTRUCTION PERSONNEL WORKING WITHIN THE FROG OR SNAKE HABITAT MUST BE APRIPRISED OF THE SPECIES DISCRIPTION AND THE POSSIBLE PRESENCE OF A LISTED SPECIES, AND INSTRUCTED TO RELOCATE FROGS OR SNAKES FOUND INSIDE WORK AREAS OR NOTIFY THE APPROPRIATE AUTHORITIES TO RELOCATE INDIVIDUALS.
7. ANY FROGS OR SNAKES ENCOUNTERED WITHIN THE IMMEDIATE WORK AREA SHALL BE CAREFULLY MOVED TO AN ADJACENT AREA OUTSIDE OF THE EXCLUDED AREA AND FENCING SHOULD BE INSPECTED TO IDENTIFY AND REMOVE ACCESS POINT.
8. SILT FENCE TO BE REMOVED FOLLOWING COMPLETION OF CONSTRUCTION ACTIVITIES.
9. NO HEAVY MACHINERY OR VEHICLES MAY BE PARKED IN ANY LISTED SPECIES HABITAT.
10. AVOID DISGRADATION OF WETLAND HABITATS INCLUDING ANY WET MEADOWS AND SEASONAL POOLS.
11. THE CONTRACTOR OR CONSULTING HERPETOLOGIST MUST SEARCH THE WORK AREA EACH MORNING PRIOR TO ANY WORK BEING DONE.
12. WHEN FELLING TREES ADJACENT TO BROOKS AND STREAMS PLEASE CUT THEM TO FALL AWAY FROM THE WATERWAY AND DO NOT DRAG TREES ACROSS THE WATERWAY OR REMOVE STUMPS FROM BANKS.
13. AVOID AND LIMIT ANY EQUIPMENT USE WITHIN 50 FEET OF STREAMS AND BROOKS.
14. ANY CONFIRMED SIGHTINGS OF NORTHERN LEOPARD FROG OR EASTERN HOGNOSE SNAKE SHOULD BE REPORTED AND DOCUMENTED WITH THE NDDB (NDDBREQUEST@DEP.CT.GOV) ON THE APPROPRIATE SPECIAL ANIMAL FORM FOUND AT (HTTP://WWW.CT.GOV/DEP/CWP/VIEW.ASP?A=2702&Q=324604&DEPNAV_GID=1641)

EROSION CONTROL LEGEND

CE	CONSTRUCTION ENTRANCE
GSF	SEDIMENT FILTER FENCE
SW	STRAW WATTLES
STK	TEMPORARY SOIL STOCKPILE SURROUNDED WITH SEDIMENT FILTER FENCE.

SOIL EROSION AND SEDIMENT CONTROL NARRATIVE

SEDIMENT AND EROSION CONTROL MEASURES AS DEPICTED ON THESE PLANS AND DESCRIBED WITH IN THE SEDIMENT AND EROSION CONTROL NARRATIVE SHALL BE IMPLIMENTED AND MAINTAINED UNTIL PERMANENT COVER AND STABILIZATION IS ESTABLISHED. ALL SEDIMENT AND EROSION CONTROL MEASURES SHALL CONFORM TO THE "GUIDELINES FOR SOIL EROSION AND SEDIMENT CONTROL, CONNECTICUT - 2002, TOWN OF SIMSBURY STANDARDS, AND IN ALL CASES BEST MANAGEMENT PRACTICES SHALL PREVAIL.

1 PURPOSE AND DESCRIPTION OF PROJECT
A.) CONSTRUCTION OF A BUILDING EXPANSION AND PARKING LOT IMPROVEMENTS.
B.) DISTURBED AREA: ± 4.5 AC.

2 IDENTIFICATION OF EROSION AND SEDIMENT CONTROL CONCERNS
A.) CUTS AND FILLS ASSOCIATED WITH CONSTRUCTION.
B.) PROTECTION OF ON-SITE WETLANDS.

3 IDENTIFICATION OF OTHER POSSIBLE PERMITS
THE PERMITS REQUIRED FOR THE PROJECT ARE LOCAL INLAND WETLANDS AND PLANNING AND ZONING

4 RESPONSIBLE PARTY
JEFF SHEA
TOWN ENGINEER, TOWN OF SIMSBURY
860-658-3260

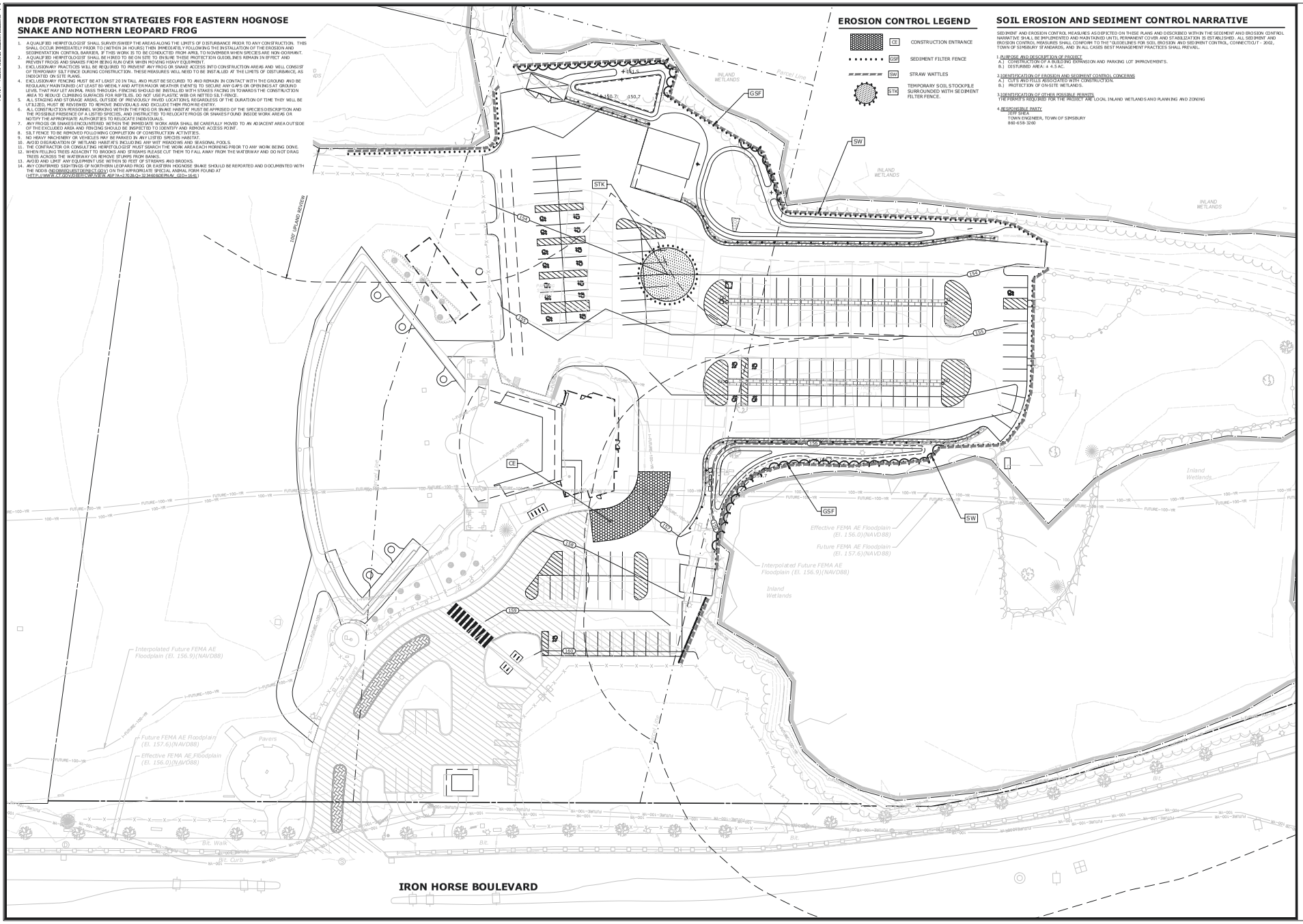

SLR
99 REALTY DRIVE
CHESHIRE, CT 06410
203.271.1773
SLRCONSULTING.COM

DESCRIPTION	DATE	BY

SEDIMENT AND EROSION CONTROL PLAN

SIMSBURY MEADOWS PERFORMING ARTS CENTER
ADA AND PARKING IMPROVEMENTS
22 IRON HORSE BOULEVARD
SIMSBURY, CONNECTICUT

AWG	AWG	TD
DESIGNED	DRAWN	CHECKED

SCALE: 1"=30'
DATE: OCTOBER 15, 2021
PROJECT NO.: 11613.00025
SHEET NO.: 05 OF 08
SHEET NAME: SE-1

Copyright SLR International Corporation - 2021

SEDIMENT AND EROSION CONTROL SPECIFICATIONS

GENERAL:

THESE GUIDELINES SHALL APPLY TO ALL WORK CONSISTING OF ANY AND ALL TEMPORARY AND/OR PERMANENT MEASURES TO CONTROL WATER POLLUTION AND SOIL EROSION, AS MAY BE REQUIRED, DURING THE CONSTRUCTION OF THE PROJECT. IN GENERAL, ALL CONSTRUCTION ACTIVITIES SHALL PROCEED IN SUCH A MANNER SO AS NOT TO POLLUTE ANY WETLANDS, WATERCOURSE, WATERBODY, AND CONDUIT CARRYING WATER, ETC. THE CONTRACTOR SHALL LIMIT, INSOFAR AS POSSIBLE, THE SURFACE AREA OF EARTH MATERIALS EXPOSED BY CONSTRUCTION METHODS AND IMMEDIATELY PROVIDE PERMANENT AND TEMPORARY POLLUTION CONTROL MEASURES TO PREVENT CONTAMINATION OF ADJACENT WETLANDS, WATERCOURSES, AND WATERBODIES, AND TO PREVENT, INSOFAR AS POSSIBLE, EROSION ON THE SITE.

LAND GRADING

GENERAL:

1. THE RESHAPING OF THE GROUND SURFACE BY EXCAVATION AND FILLING OR A COMBINATION OF BOTH, TO OBTAIN PLANNED GRADES, SHALL PROCEED IN ACCORDANCE WITH THE FOLLOWING CRITERIA:
   a. THE CUT FACE OF EARTH EXCAVATION SHALL NOT BE STEEPER THAN TWO HORIZONTAL TO ONE VERTICAL (2:1).
   b. THE PERMANENT EXPOSED FACES OF FILLS SHALL NOT BE STEEPER THAN TWO HORIZONTAL TO ONE VERTICAL (2:1).
   c. THE CUT FACE OF ROCK EXCAVATION SHALL NOT BE STEEPER THAN ONE HORIZONTAL TO FOUR VERTICAL (1:4).
   d. PROVISION SHOULD BE MADE TO CONDUCT SURFACE WATER SAFELY TO STORM DRAINS TO PREVENT SURFACE RUNOFF FROM DAMAGING CUT FACES AND FILL SLOPES.
   e. EXCAVATIONS SHOULD NOT BE MADE SO CLOSE TO PROPERTY LINES AS TO ENDANGER ADJOINING PROPERTY WITHOUT PROTECTING SUCH PROPERTY FROM EROSION, SLIDING, SETTLING, OR CRACKING.
   f. NO FILL SHOULD BE PLACED WHERE IT WILL SLIDE OR WASH UPON THE PREMISES OF ANOTHER OWNER OR UPON ADJACENT WETLANDS, WATERCOURSES, OR WATERBODIES.
   g. PRIOR TO ANY REGRADING, A STABILIZED CONSTRUCTION ENTRANCE SHALL BE PLACED AT THE ENTRANCE TO THE WORK AREA IN ORDER TO REDUCE MUD AND OTHER SEDIMENTS FROM LEAVING THE SITE.

TOPSOILING

GENERAL:

1. TOPSOIL SHALL BE SPREAD OVER ALL EXPOSED AREAS IN ORDER TO PROVIDE A SOIL MEDIUM HAVING FAVORABLE CHARACTERISTICS FOR THE ESTABLISHMENT, GROWTH, AND MAINTENANCE OF VEGETATION.
2. UPON ATTAINING FINAL SUBGRADES, SCARIFY SURFACE TO PROVIDE A GOOD BOND WITH TOPSOIL.
3. REMOVE ALL LARGE STONES, TREE LIMBS, ROOTS AND CONSTRUCTION DEBRIS.
4. APPLY SOIL AMENDMENTS AS FOLLOWS:
   LIME: ACCORDING TO SOIL TEST OR AT THE RATE OF 2 TONS PER ACRE.

   ROCK DUST: ACCORDING TO SOIL TEST OR AT THE RATE OF 2 TONS PER ACRE

MATERIAL:

1. TOPSOIL SHOULD HAVE PHYSICAL, CHEMICAL, AND BIOLOGICAL CHARACTERISTICS FAVORABLE TO THE GROWTH OF PLANTS.
2. TOPSOIL SHOULD HAVE A SANDY OR LOAMY TEXTURE.
3. TOPSOIL SHOULD BE RELATIVELY FREE OF SUBSOIL MATERIAL AND MUST BE FREE OF LARGE STONES , LUMPS OF SOIL, ROOTS, TREE LIMBS, TRASH, OR CONSTRUCTION DEBRIS. IT SHOULD BE FREE OF ROOTS OR RHIZOMES SUCH AS THISTLE, NUTGRASS, AND QUACKGRASS.
4. AN ORGANIC MATTER CONTENT OF SIX PERCENT (6%) IS REQUIRED. AVOID LIGHT COLORED SUBSOIL MATERIAL.
5. SOLUBLE SALT CONTENT OF LESS THAN 400 PPM IS REQUIRED.
6. THE TOPSOIL SHALL BE WARRANTED BY SELLER TO BE FREE OF DETECTABLE RESIDUES OF CHEMICAL PESTICIDES, HERBICIDES, PETROLEUM PRODUCTS, OR OTHER UNSUITABLE TOXINS.

APPLICATION:

1. AVOID SPREADING WHEN TOPSOIL IS WET OR FROZEN.
2. SPREAD TOPSOIL UNIFORMLY TO A DEPTH OF AT LEAST FOUR INCHES (4"), OR TO THE DEPTH SHOWN ON THE LANDSCAPING PLANS.

TEMPORARY VEGETATIVE COVER

TEMPORARY VEGETATIVE COVER SHALL BE ESTABLISHED ON ALL UNPROTECTED AREAS THAT PRODUCE SEDIMENT, AREAS WHERE FINAL GRADING HAS BEEN COMPLETED, AND AREAS WHERE THE ESTIMATED PERIOD OF BARE SOIL EXPOSURE IS LESS THAN 12 MONTHS. TEMPORARY VEGETATIVE COVER SHALL BE APPLIED IF AREAS WILL NOT BE PERMANENTLY SEEDED BY SEPTEMBER 1.

GENERAL:

1. INSTALL REQUIRED SURFACE WATER CONTROL MEASURES.
2. REMOVE LOOSE ROCK, STONE, AND CONSTRUCTION DEBRIS FROM AREA.
3. APPLY SOIL AMENDMENTS AS FOLLOWS:
   LIME: ACCORDING TO SOIL TEST OR AT THE RATE OF 1 TONS PER ACRE.
   ROCK DUST: ACCORDING TO SOIL TEST OR AT THE RATE OF 1 TONS PER ACRE
4. UNLESS HYDROSEEDED, WORK IN LIME TO A DEPTH OF 4 INCHES WITH A DISK OR ANY SUITABLE EQUIPMENT. DO NOT WORK FINISHED COMPOST INTO THE SOIL - APPLY IT EVENLY TO SOIL SURFACE AS A SEED BED.
5. TILLAGE SHOULD ACHIEVE A REASONABLY UNIFORM LOOSE SEEDBED. WORK ON CONTOUR IF SITE IS SLOPING.

SITE PREPARATION:

1. SELECT APPROPRIATE SPECIES FOR THE SITUATION. NOTE RATES AND SEEDING DATES (SEE VEGETATIVE COVER SELECTION & MULCHING)
2. APPLY SEED UNIFORMLY ACCORDING TO THE RATE INDICATED BY BROADCASTING, DRILLING, OR HYDRAULIC APPLICATION.
3. UNLESS HYDROSEEDED, COVER RYEGRASS SEEDS WITH NOT MORE THAN 1/4 INCH OF SOIL USING SUITABLE EQUIPMENT.
4. MULCH IMMEDIATELY AFTER SEEDING IF REQUIRED. (SEE VEGETATIVE COVER SELECTION & MULCHING SPECIFICATION BELOW.) APPLY STRAW AND ANCHOR TO SLOPES GREATER THAN 3%%% OR WHERE NEEDED.

PERMANENT VEGETATIVE COVER

GENERAL:

PERMANENT VEGETATIVE COVER SHALL BE ESTABLISHED AS VARIOUS SECTIONS OF THE PROJECT ARE COMPLETED IN ORDER TO STABILIZE THE SOIL, REDUCE DOWNSTREAM DAMAGE FROM SEDIMENT AND RUNOFF, AND TO ENHANCE THE AESTHETIC NATURE OF THE SITE. IT WILL BE APPLIED TO ALL CONSTRUCTION AREAS SUBJECT TO EROSION WHERE FINAL GRADING HAS BEEN COMPLETED AND A PERMANENT COVER IS NEEDED.

SITE PREPARATION:

1. INSTALL REQUIRED SURFACE WATER CONTROL MEASURES.
2. REMOVE LOOSE ROCK, STONE, AND CONSTRUCTION DEBRIS FROM AREA.
3. PERFORM ALL PLANTING OPERATIONS PARALLEL TO THE CONTOURS OF THE SLOPE.
4. APPLY TOPSOIL AS INDICATED ELSEWHERE HEREIN.
5. APPLY SOIL AMENDMENTS AS FOLLOWS:
   LIME: ACCORDING TO SOIL TEST OR AT THE RATE OF 1 TONS PER ACRE.
   ROCK DUST: ACCORDING TO SOIL TEST OR AT THE RATE OF 1 TONS PER ACRE
6. UNLESS HYDROSEEDED, WORK IN LIME TO A DEPTH OF 4 INCHES WITH A DISK OR ANY SUITABLE EQUIPMENT. DO NOT WORK FINISHED COMPOST

VEGETATED COVER SELECTION AND MULCHING

TEMPORARY VEGETATIVE COVER:

PERENNIAL RYEGRASS 5 LBS./1,000 SQ.FT. (LOLIUM PERENNE)
DUTCH WHITE CLOVER (TRIFOLIUM REPENS) 1/4 LBS PER 1000 SF. OR 6LBS/AC.

* PERMANENT VEGETATIVE COVER:

DUTCH WHITE CLOVER 30%
BARON KENTUCKY BLUEGRASS 30%
JAMESTOWN II CHEWINGS FESCUE 20%
PALMER PERENNIAL RYEGRASS 20%

NEW ENGLAND EROSION CONTROL/R3ESOTRATION MIX FOR MOIST SITES AT 1/8 LB PER 1000 S.F. FOR 5 LBS/AC.

NEW ENGLAND SHOWY WILD FLOWER MIX AT 1/16 LB PER 1000 S.F. OR 2 LBS/AC

* LOFTS - "TRIPLEX GENERAL" MIX OR APPROVED EQUAL. RECOMMENDED RATE/TIME SEEDING.
SPRING SEEDING: 4/1 to 5/31
FALL SEEDING: 8/16 to 10/15

TEMPORARY MULCHING:

STRAY 70-90 LBS./1,000 SQ.FT. (TEMPORARY VEGETATIVE AREAS) WOOD FIBER IN HYDROMULCH SLURRY 25-50 LBS./1,000 SQ. FT.

ESTABLISHMENT:
1. SMOOTH AND FIRM SEEDBED WITH CULTIPACKER OR OTHER SIMILAR EQUIPMENT PRIOR TO SEEDING (EXCEPT WHEN HYDROSEEDING).
2. SELECT ADAPTED SEED MIXTURE FOR THE SPECIFIC SITUATION. NOTE RATES AND THE SEEDING DATES (SEE VEGETATIVE COVER SELECTION & MULCHING SPEC. BELOW).
3. APPLY SEED UNIFORMLY ACCORDING TO RATE INDICATED, BY BROADCASTING, DRILLING, OR HYDRAULIC APPLICATION.
4. COVER GRASS AND LEGUME SEED WITH NOT MORE THAN 1/4 INCH OF SOIL WITH SUITABLE EQUIPMENT (EXCEPT WHEN HYDROSEEDING).
5. MULCH IMMEDIATELY AFTER SEEDING, IF REQUIRED, ACCORDING TO TEMPORARY MULCHING SPECIFICATIONS. (SEE VEGETATIVE COVER SELECTION & MULCHING SPECIFICATION BELOW).
6. USE PROPER INOCULAT ON ALL LEGUME SEEDLINGS, USE FOUR (4) TIMES NORMAL RATES WHEN HYDROSEEDING.
7. USE SOD WHERE THERE IS A HEAVY CONCENTRATION OF WATER AND IN CRITICAL AREAS WHERE IT IS IMPORTANT TO GET A QUICK VEGETATIVE COVER TO PREVENT EROSION.

MAINTENANCE:

1. TEST FOR SOIL ACIDITY EVERY THREE (3) YEARS AND LIME AS REQUIRED.

EROSION CHECKS

GENERAL:

1. TEMPORARY PERVIOUS BARRIERS USING BALES OF HAY OR STRAW, HELD IN PLACE WITH STAKES DRIVEN THROUGH THE BALES AND INTO THE GROUND OR GEOTEXTILE FABRIC FASTENED TO A FENCE POST AND BURIED INTO THE GROUND, SHALL BE INSTALLED AND MAINTAINED AS REQUIRED TO CHECK EROSION AND REDUCE SEDIMENTATION.

CONSTRUCTION:

1. BALES SHOULD BE PLACED IN A ROW WITH ENDS TIGHTLY ABUTTING THE ADJACENT BALES.
2. EACH BALE SHALL BE EMBEDDED INTO THE SOIL A MINIMUM OF FOUR (4") INCHES.
3. BALES SHALL BE SECURELY ANCHORED IN PLACE BY WOOD STAKES OR REINFORCEMENT BARS DRIVEN THROUGH THE BALES AND INTO THE GROUND. THE FIRST STAKE IN EACH BALE SHALL BE ANGLED TOWARD THE PREVIOUSLY LAID BALE TO FORCE BALES TOGETHER.
4. GEOTEXTILE FABRIC SHALL BE SECURELY ANCHORED AT THE TOP OF A THREE FOOT (3') HIGH FENCE AND BURIED A MINIMUM OF FOUR INCHES (4") TO THE SOIL. SEAMS BETWEEN SECTIONS OF FILTER FABRIC SHALL OVERLAP A MINIMUM OF TWO FEET (2').

INSTALLATION AND MAINTENANCE:

1. BALED HAY EROSION BARRIERS SHALL BE INSTALLED AT ALL STORM SEWER INLETS.
2. BALED HAY EROSION BARRIERS AND GEOTEXTILE FENCE SHALL BE INSTALLED AT THE LOCATION INDICATED ON THE PLAN AND IN ADDITIONAL AREAS AS MAY BE DEEMED APPROPRIATE DURING CONSTRUCTION.
3. ALL EROSION CHECKS SHALL BE MAINTAINED UNTIL ADJACENT AREAS ARE STABILIZED.
4. INSPECTION SHALL BE FREQUENT (AT MINIMUM MONTHLY AND BEFORE AND AFTER HEAVY RAIN) AND REPAIR OR REPLACEMENT SHALL BE MADE PROMPTLY AS NEEDED.
5. EROSION CHECKS SHALL BE REMOVED WHEN THEY HAVE SERVED THEIR USEFULNESS SO AS NOT TO BLOCK OR IMPEDE STORMWATER FLOW OR DRAINAGE.

EROSION CONTROL MAINTENANCE INTERVALS

EROSION CONTROL MEASURE	CONTROL OBJECTIVE	INSPECTION/MAINTENANCE	FAILURE INDICATORS	REMOVAL
SILT FENCE (SF) (RELATED: IP, STK)	- INTERCEPT, AND REDIRECT/DETAIN SMALL AMOUNTS OF SEDIMENT FROM SMALL DISTURBED AREAS. - DECREASE VELOCITY OF SHEET FLOW. - PROTECT SENSITIVE SLOPES OR SOILS FROM EXCESSIVE WATER FLOW.	INSPECT AT LEAST ONCE A WEEK AND WITHIN 24 HOURS OF THE END OF A STORM WITH A RAINFALL OF 0.5 INCHES OR MORE. ACCUMULATED SEDIMENT MUST BE REMOVED ONCE ITS DEPTH IS EQUAL TO ½ THE TRENCH HEIGHT. INSPECT FREQUENTLY DURING PUMPING OPERATIONS IF USED FOR DEWATERING OPERATIONS.	- PHYSICAL DAMAGE OR DECOMPOSITION - EVIDENCE OF OVERTOPPED OR UNDERCUT FENCE - EVIDENCE OF SIGNIFICANT FLOWS EVADING CAPTURE - REPETITIVE FAILURE	SILT FENCE MAY BE REMOVED AFTER UPHILL AND SENSITIVE AREAS HAVE BEEN PERMANENTLY STABILIZED.
CONSTRUCTION ENTRANCE (CE)	- REDUCE THE TRACKING OF SEDIMENT OFF-SITE ONTO PAVED SURFACES.	INSPECT AT THE END OF EACH WORK DAY AND IMMEDIATELY REPAIR DAMAGES. PERIODIC ADDITION OF STONE, OR LENGTHENING OF ENTRANCE MAY BE REQUIRED AS CONDITIONS DEMAND. ALL SEDIMENT SPILLED, DROPPED, WASHED, OR TRACKED ONTO PAVED SURFACES AS A RESULT OF INEFFICIENCY OF CONSTRUCTION ENTRANCE SHALL BE IMMEDIATELY REMOVED.	- SEDIMENT IN ROADWAY ADJACENT TO SITE	CONSTRUCTION ENTRANCE MAY BE REMOVED ONCE THE SITE HAS BEEN PERMANENTLY STABILIZED, AND ALL OTHER SECTIONS OF ROADWAY HAVE BEEN PERMANENTLY PAVED.
INLET PROTECTION (IP)	- PROHIBIT SILT IN CONSTRUCTION-RELATED RUNOFF FROM ENTERING STORM DRAINAGE SYSTEM.	INSPECT AFTER ANY RAIN EVENT. IF FILTER BAG INSIDE CATCH BASIN CONTAINS MORE THAN 6' OF SEDIMENT, REMOVE SEDIMENT FROM BAG. CHECK SURROUNDING SILT FENCE AND HAY BALES PER NOTED ABOVE.	- RIPPED BAG - FAILED HAY BALES / SILT FENCE - SIGNIFICANT SILT PRESENCE IN STORM DRAINAGE SYSTEM OUTFLOW.	INLET PROTECTION MAY BE REMOVED ONCE THE SITE HAS BEEN PERMANENTLY STABILIZED, AND ALL SECTIONS OF ROADWAY HAVE BEEN PERMANENTLY PAVED.
STOCKPILE PROTECTION (STK)	- RETAIN SOIL STOCKPILE IN LOCATIONS SPECIFIED, AND REDUCE WATER-TRANSPORT.	INSPECT SILT FENCE AT THE END OF EACH WORK DAY AND IMMEDIATELY REPAIR DAMAGES. PERIODIC REINFORCEMENT OF SILT FENCE, OR ADDITION OF HAY BALES MAY BE NECESSARY.	- EVIDENCE OF STOCK PILE DIMINISHING DUE TO RAIN EVENTS - FAILURE OF SILT FENCE	STOCKPILE PROTECTION MAY BE REMOVED ONCE THE STOCKPILE IS USED OR REMOVED.
TEMPORARY SEDIMENT TRAP (TST)	- DETAIN SEDIMENT-LADEN RUNOFF FROM SMALL DISTURBED AREAS LONG ENOUGH TO ALLOW A MAJORITY OF THE SEDIMENT TO SETTLE OUT.	INSPECT AT LEAST ONCE A WEEK AND WITHIN 24 HOURS OF THE END OF A STORM WITH A RAINFALL OF 0.5 INCHES OR MORE. STONE OUTLET SHOULD BE AT LEAST 1 FOOT BELOW CREST OF EMBANKMENT. SEDIMENT MUST BE REMOVED WHEN ACCUMULATION REACHES ½ OF THE REQUIRED WET STORAGE.	- TURBID WATER - EXCESSIVE SEDIMENT ACCUMULATION - OVERTOPPING EVIDENCE	TST MAY BE REMOVED ONCE THE CONTRIBUTING DRAINAGE AREA IS PERMANENTLY STABILIZED.
TEMPORARY DIVERSION BERM/SWALE (DB)	- MINIMIZE VELOCITY AND CONCENTRATION OF SHEET FLOW ACROSS CONSTRUCTION SITE TO A SEDIMENT TRAPPING FACILITY. - DIVERT WATER ORIGINATING FROM UNDISTURBED AREA AWAY FROM CONSTRUCTION.	WHEN LOCATED WITHIN CLOSE PROXIMITY TO ONGOING CONSTRUCTION ACTIVITIES, INSPECT AT THE END OF EACH WORK DAY AND IMMEDIATELY REPAIR DAMAGES. OTHERWISE INSPECT AT LEAST ONCE A WEEK AND WITHIN 24 HOURS OF THE END OF A STORM WITH A RAINFALL OF 0.5 INCHES OR MORE. REPAIR THE TEMPORARY MEASURE AND ANY OTHER ASSOCIATED MEASURES WITHIN 24 HOURS.	- PHYSICAL DAMAGE - EXCESSIVE SCOURING/EROSION - REPETITIVE FAILURE	TEMPORARY DIVERSIONS MAY BE REMOVED ONCE CONSTRUCTION HAS CEASED AND THE CONTRIBUTING DRAINAGE AREA HAS BEEN PERMANENTLY STABILIZED.

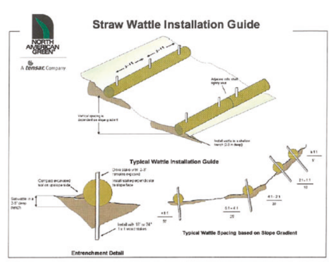

1. BEGIN AT THE LOCATION WHERE THE WATTLE IS TO BE INSTALLED BY EXCAVATING A 2-3" (5-7.5 CM) DEEP X 9" (22.9 CM) WIDE TRENCH ALONG THE CONTOUR OF THE SLOPE. EXCAVATED SOIL SHOULD BE PLACED UP-SLOPE FROM THE ANCHOR TRENCH.
2. PLACE THE WATTLE IN THE TRENCH SO THAT IT CONTOURS TO THE SOIL SURFACE. COMPACT SOIL FROM THE EXCAVATED TRENCH AGAINST THE WATTLE ON THE UPHILL SIDE. ADJACENT WATTLES SHOULD TIGHTLY ABUT.
3. SECURE THE WATTLE WITH 18-24" (45.7-61 CM) STAKES EVERY 3-4' (0.9 - 1.2 M) AND WITH A STAKE ON EACH END. STAKES SHOULD BE DRIVEN THROUGH THE MIDDLE OF THE WATTLE LEAVING AT LEAST 2-3" (5-7.5 CM) OF STAKE EXTENDING ABOVE THE WATTLE. STAKES SHOULD BE DRIVEN PERPENDICULAR TO SLOPE FACE.

North American Green Straw Wattles are a Best Management Practice (BMP) that offers an effective and economical alternative to silt fence and straw bales for sediment control and storm water runoff.

Guidelines are provided to assist in design, installation, and structure spacing. The guidelines may require modification due to variation in soil type, rainfall intensity or duration, and amount of runoff affecting the application site.

To maximize sediment containment with the Straw Wattle, place the initial structure at the top/crest of the slope if significant runoff is expected from above. If no runoff from above is expected, the initial Straw Wattle can be installed at the appropriate distance downhill from the top/crest of the slope. The final structure should be installed at or just beyond the bottom/toe of the slope. Wattles should be installed perpendicular to the primary direction of overland flow.

Straw Wattles are a temporary sediment control device and are not intended to replace rolled erosion control products (RECPs) or hydraulic erosion control products (HECPs). If vegetation is desired for permanent erosion control, North American Green recommends that RECPs or HECPs be used to provide effective immediate erosion control until vegetation is established. Straw Wattles may be used in conjunction with blankets, mats, and mulches as supplemental sediment and runoff control for these applications. Like all sediment control devices, the effectiveness of the Straw Wattle is dependent on storage capacity.

For additional installation assistance, please contact North American Green's Technical Services Department at 1-800-772-2040

14649 Highway 41 North, Evansville, Indiana 47725
1-800-772-2040 www.nagreen.com Rev. 1/2008

STRAW WATTLE (SW)

NOT TO SCALE

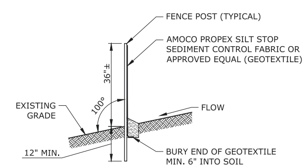

SEDIMENT FILTER FENCE

NOT TO SCALE

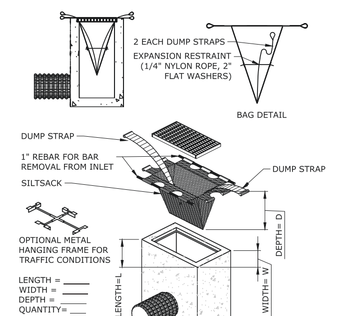

INLET SEDIMENT CONTROL DEVICE

NOT TO SCALE

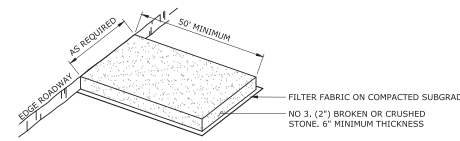

NOTES:

1. CONSTRUCTION ENTRANCE PAD SHALL BE INSTALLED AND MAINTAINED DURING OPERATIONS WHICH GENERATE VEHICULAR TRACKING OF MUD.

CONSTRUCTION ENTRANCE PAD

NOT TO SCALE

SLR
99 REALTY DRIVE
CHESHIRE, CT 06410
203.271.1773
SLRCONSULTING.COM

DESCRIPTION	DATE	BY

SEDIMENT AND EROSION CONTROL SPECIFICATIONS AND DETAILS

SIMSBURY MEADOWS PERFORMING ARTS CENTER
ADA AND PARKING IMPROVEMENTS

22 IRON HORSE BOULEVARD
SIMSBURY, CONNECTICUT

DESIGNED	DRAWN	CHECKED
AWG	AWG	TD

SCALE: AS NOTED
DATE: OCTOBER 15, 2021
PROJECT NO. 11613.00025
SHEET NO. 06 OF 08
SHEET NAME: SE-2

Copyright SLR International Corporation - 2021

Drawing: W:\CADDESIGN\11613.00025-DE\CAD\PA-SITE DETAILS.DWG Layout Tab:SE-2
Plotted by: AGORALSKI On this date: Thu, 2021 October 14 - 1:32pm

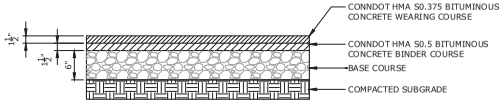

NOTE:
1. DEPTH OF BASE & SUB BASE MATERIALS AS PER GEOTECHNICAL REPORT

STANDARD DUTY BITUMINOUS CONCRETE

NOT TO SCALE

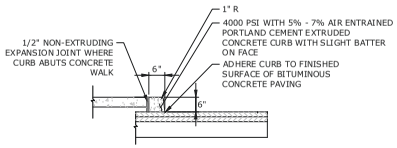

EXTRUDED CONCRETE CURB

NOT TO SCALE

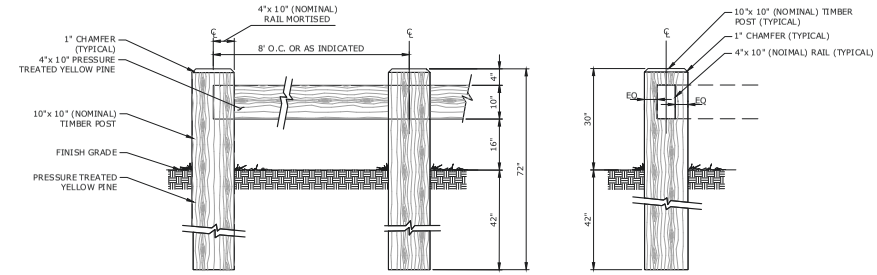

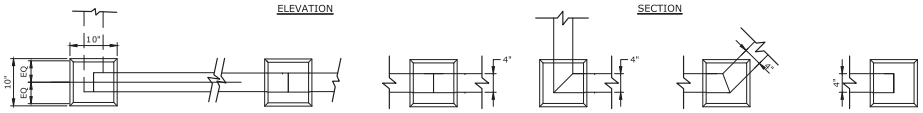

NOTES:
1. CONTRACTOR TO PROVIDE 90°, 45° OR END POSTS WHERE REQUIRED.
2. CONTRACTOR TO PROVIDE SHOP DRAWINGS FOR ENTIRE SYSTEM.

TIMBER POST GUIDE RAIL MORTISE & TENON 10x10 POSTS

NOT TO SCALE

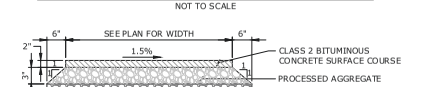

BITUMINOUS CONCRETE WALKS

NOT TO SCALE

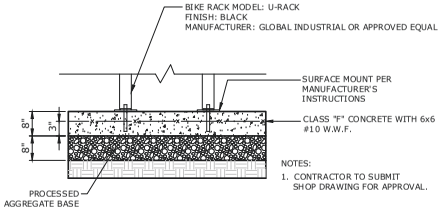

NOTES:
1. CONTRACTOR TO SUBMIT SHOP DRAWING FOR APPROVAL.

CONCRETE BASE FOR BIKE RACK

NOT TO SCALE

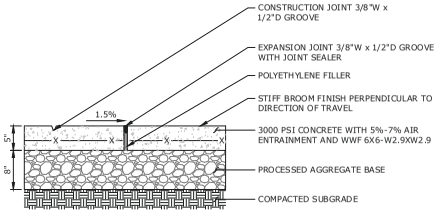

NOTES:
1. EXPANSION JOINTS 20' O.C. MAXIMUM CONSTRUCTION JOINTS 5' O.C. TYPICAL (OR AS SHOWN ON PLANS).

CONCRETE SIDEWALK

NOT TO SCALE

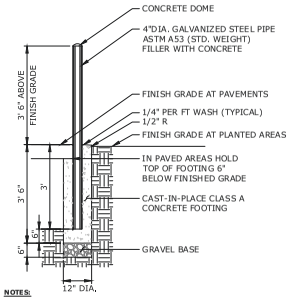

NOTES:
1. FINISH TO BE COLOR GALVANIZED, TO BE DETERMINED BY ARCHITECT.

STEEL PIPE BOLLARD 4"DIA.

NOT TO SCALE

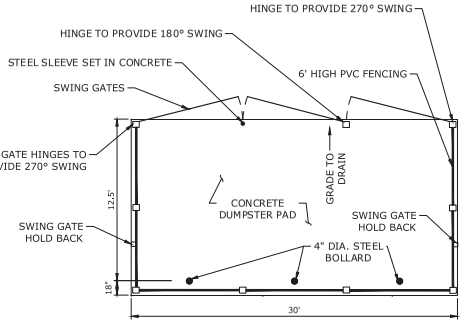

DUMPSTER ENCLOSURE - PLAN VIEW

NOT TO SCALE

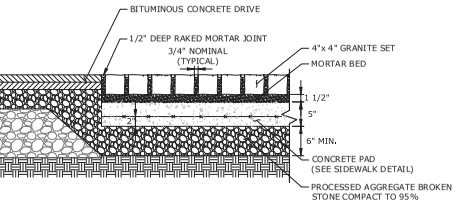

FLUSH GRANITE COBBLE ISLAND

NOT TO SCALE

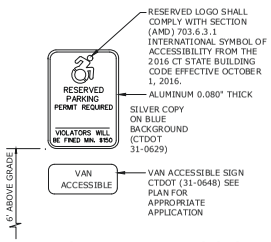

RESERVED PARKING SIGN

NOT TO SCALE

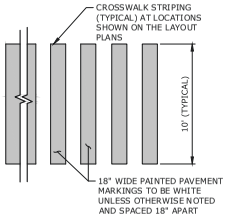

CROSSWALK PAVEMENT MARKING

NOT TO SCALE

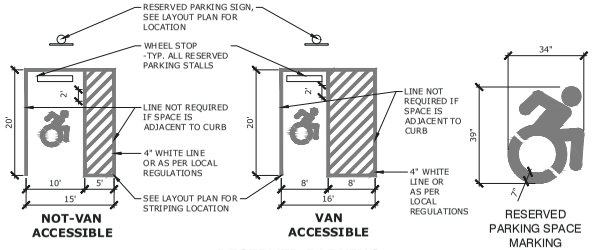

RESERVED PARKING

NOT TO SCALE

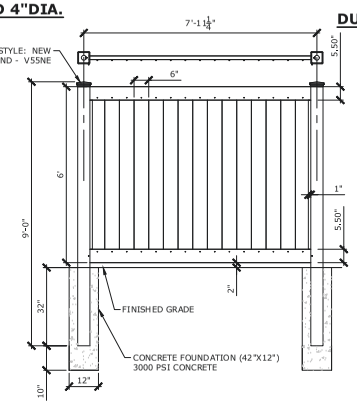

NOTES:
1. INSTALLATION TO BE COMPLETED IN ACCORDANCE WITH MANUFACTURER'S SPECIFICATIONS.
2. ALL DIMENSIONS ARE CONSIDERED TRUE AND REFLECT MANUFACTURER'S SPECIFICATIONS.
3. VINYL FENCE SHALL BE ASTM F964-09 COMPLIANT.
4. COLOR: GRAY
5. FENCE TO BE MODEL V300 (6' HIGH) WITH WIND KIT AS MANUFACTURED BY:
   ILLUSIONS VINYL FENCE
   MEDFORD, NY 11763
   www.illusionsfence.com
   TOLL FREE: 1-800-339-3362

   OR AN APPROVED EQUAL.
6. CAP STYLE TO BE NEW ENGLAND - V55NE

6' VINYL CLAD PRIVACY FENCE

NOT TO SCALE

DESCRIPTION	DATE	BY

SLR
99 REALTY DRIVE
CHESHIRE, CT 06410
203.271.1773
SLRCONSULTING.COM

SITE DETAILS

SIMSBURY MEADOWS PERFORMING ARTS CENTER
ADA AND PARKING IMPROVEMENTS
22 IRON HORSE BOULEVARD
SIMSBURY, CONNECTICUT

AWG	AWG	TD
DESIGNED	DRAWN	CHECKED

SCALE: AS NOTED

DATE: OCTOBER 15, 2021

PROJECT NO.: 11613.00025

SHEET NO.: 07 OF 08

SHEET NAME: SD-1

Copyright SLR International Corporation - 2021

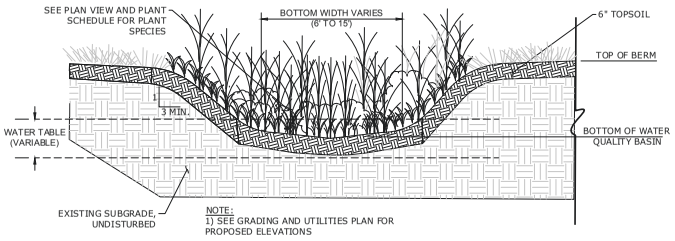

NOTE:
1) SEE GRADING AND UTILITIES PLAN FOR PROPOSED ELEVATIONS

WATER QUALITY BASIN - WET BASIN TYPICAL SECTION

NOT TO SCALE

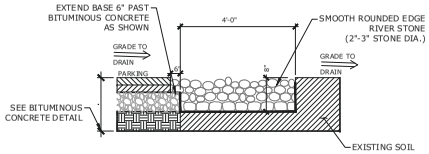

GRAVEL STRIP ALONG PARKING LOT

NOT TO SCALE

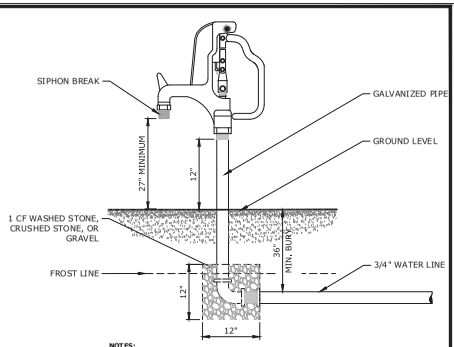

NOTES:

1. HOSE BIB SHALL ACCOMMODATE STANDARD 3/4" GARDEN HOSE.

YARD HYDRANT (NON-FREEZE)

NOT TO SCALE

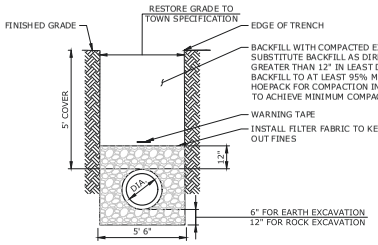

WATER MAIN TRENCH

NOT TO SCALE

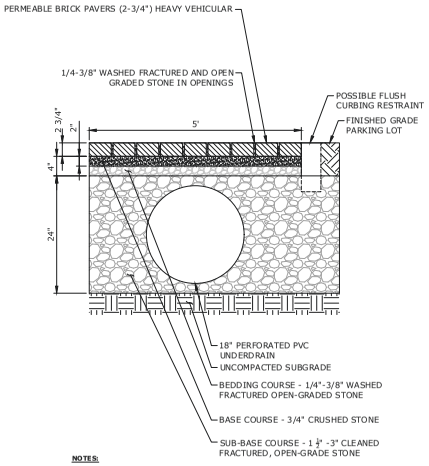

NOTES:

1. SUBGRADE IS NOT TO BE OVER COMPACTED.
2. ALL STONE MATERIALS ARE TO BE CLEAN AND CAREFULLY PLACED.
3. ALLOW PAVERS TO SET BEFORE HEAVY VEHICULAR USE.

PERMEABLE BRICK PAVERS WITH UNDERDRAIN

NOT TO SCALE

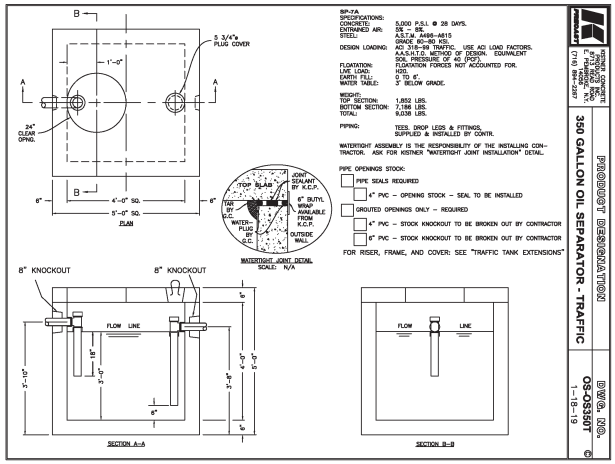

350 GALLON OIL SEPARATOR

NOT TO SCALE

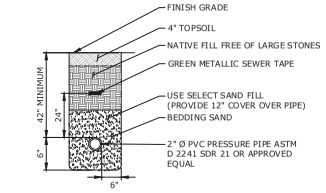

FORCE MAIN TRENCH

NOT TO SCALE

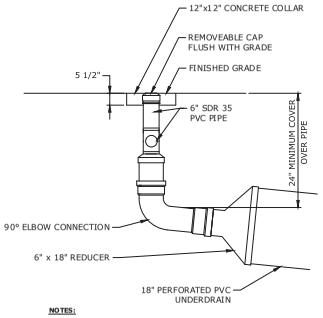

NOTES:

1. SEE SITE PLAN FOR CLEAN-OUT LOCATIONS.

6" UNDERDRAIN CLEANOUT

NOT TO SCALE

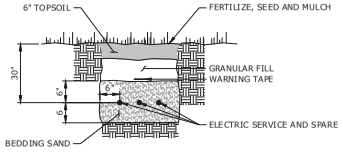

ELECTRICAL UTILITY TRENCH

NOT TO SCALE

DESCRIPTION	DATE	BY

SLR
99 REALTY DRIVE
CHESHIRE, CT 06410
203.271.1773
SLRCONSULTING.COM

SITE DETAILS

SIMSBURY MEADOWS PERFORMING ARTS CENTER
ADA AND PARKING IMPROVEMENTS
22 IRON HORSE BOULEVARD
SIMSBURY, CONNECTICUT

AWG	AWG	AWG
DESIGNED	DRAWN	CHECKED

SCALE: AS NOTED

DATE: OCTOBER 15, 2021

PROJECT NO.: 11613.00025

SHEET NO.: 08 OF 08

SHEET NAME: SD-2

Copyright SLR International Corporation - 2021

Connecticut Department of
ENERGY & ENVIRONMENTAL PROTECTION

79 Elm Street • Hartford, CT 06106-5127 portal.ct.gov/DEEP Affirmative Action/Equal Opportunity Employer

Compliance Certification Form

The following certification must be signed by the licensee working in consultation with a Connecticut-licensed design professional and must be submitted to the address indicated at the end of this form within ninety (90) days of completion of the authorized work.

1. Licensee Name: CT DECD

   DEEP License Number(s): 202112052-FM

   Municipality in which project is occurring: Simsbury

2. **Check one:**

   (a) ☐ "I certify that the final site conditions and / or structures are in general conformance with the approved site plans". Identify and describe any deviations and attach to this form.

   (b) ☐ "The final site conditions and / or structures are not in general conformance with the approved site plans. The enclosed "as-built" plans note the modifications".

3. "I understand that any false statement in this certification is punishable as a criminal offence under section 53a-157b of the General Statutes and under any other applicable law."

_____ _____
Signature of Licensee Date

_____
Name of Licensee (print or type)

_____ _____
Signature of CT-Licensed Design Professional Date

_____
Name of CT-Licensed Design Professional (print or type)

_____
Professional License Number (if applicable)

Affix Stamp Here

- As-built plans shall include: elevations or tidal datums, as applicable, and structures, including any proposed elevation views and cross sections included in the approved license plans. Such as-built plans shall be the original ones and be signed and sealed by an engineer, surveyor or architect, as applicable, who is licensed in the State of Connecticut.
- The Licensee will be notified by staff of the Land and Water Resources Division (LWRD) if further compliance review is necessary. Lack of response by LWRD staff does not imply compliance.

Submit this completed form to :
Regulatory Section
Department of Energy and Environmental Protection
Land & Water Resources Division
79 Elm Street
Hartford, CT 06106-5127

Connecticut Department of
ENERGY & ENVIRONMENTAL PROTECTION

Attachment #20

79 Elm Street • Hartford, CT 06106-5127 www.ct.gov/deep Affirmative Action/Equal Opportunity Employer

March 19, 2021

Daniel Gannon
Town of Simsbury
933 Hopmeadow St
Simsbury, CT 06070
DGANNON@SIMSBURY-CT.GOV

NDDB DETERMINATION NUMBER: 202103526

Project: Installation of concrete seating and paving parking areas with associated drainage improvements; SIMSBURY MEADOW ACCESSIBILITY & SAFETY IMPROVEMENTS, 22 IRON HORSE BOULEVARD, SIMSBURY, CT

Expiration Date: March 19, 2023

I have reviewed Natural Diversity Data Base (NDDB) maps and files regarding this project. According to our records, there are State-listed species (RCSA Sec. 26-306) documented nearby the proposed project area.

Northern leopard frog (*Rana pipiens*)- State Special Concern

This species is found in open, grassy habitats either along the floodplain of a large stream or river, or in wetlands around the margins of large lakes. This species is dormant from November 1 to March 31. Maintaining healthy wetlands and undisturbed buffers will benefit this species. Do not change water quality, turbidity, temperature, or chemistry of wetland complex. Avoid shoreline development of wetland complexes. It will increase indirect effects of water quality change and general disturbance of the marsh.

Impact from this project can be minimized if you follow all Industry Best Practices, minimize impact to and loss of preferred habitat, and include any protection measures in Species General Ecology that relate to your project activities before, during, and after completion.

When working in the upland between April 1- October 31:

- Exclusionary practices will be required to prevent any frogs access into construction areas from adjacent wetland habitat. These measures will need to be installed at the limits of disturbance as shown on the plans.
- Exclusionary fencing be at least 20 inches tall and must be secured to and remain in contact with the ground and be regularly maintained (at least bi-weekly and after major weather events) to secure any gaps or openings at ground level that may let animal pass through.
- In areas where silt fence is used for exclusion, it shall be removed as soon as the area is stable to allow for reptile and amphibian passage to resume.

Multiple State Listed Freshwater mussels in the Farmington River

Freshwater mussels are aquatic animals that play an important role in our environment. These sedentary organisms live in sediments on the bottom of streams and rivers and provide a service to all by filtering water and removing bacteria and phytoplankton. It is because they are filter-feeding animals that they are very susceptible to sediments and pollutants in the water in which they live. The greatest diversity of freshwater

mussels in the world is found in Eastern North America. Freshwater mussels are one of the most endangered groups of animals with almost three-quarters of the native mussels in North America imperiled. The disappearance of freshwater mussels is a reliable indicator of chronic water pollution. The following considerations will help protect and benefit these species.

- Adhere strictly to water quality standards at your project site.
- Pay special attention and address specific monitoring targets for sediment, water temperature, copper, and ammonia (TAN).
- No vegetation should be removed from the 100ft buffer of waterways.
- Turf grass and impervious surface should be minimized.
- Reconnect waterways that are disconnected by perched, undersized, or shallow stream culverts.
- Employ precautions to prevent the introduction and spread of invasive plants and bivalves.
- Take action to reduce non-point source pollution and educate the surrounding community about how to reduce non-point source pollution. More information can be found in our resources for Low Impact Development here:
    - www.ct.gov/deep/cwp/view.asp?a=2719&q=464958&deepNav_GID=1654

Your application acknowledges its proximity to the sensitive wetland Critical Habitat, Alluvial Freshwater Marsh habitat.

- **Disturbance and traffic through sensitive wetland habitats should be prohibited. Species sensitive areas should be delineated and protected from disturbance and recreational activity at your site.**

This is determination is valid for two years. Please submit an updated NDDB Request for Review if the scope of the proposed work changes or if work has not begun by expiration date.

Natural Diversity Data Base information includes all information regarding critical biological resources available to us at the time of the request. This information is a compilation of data collected over the years by the Department of Energy and Environmental Protection's Bureau of Natural Resources and cooperating units of DEEP, independent conservation groups, and the scientific community. This information is not necessarily the result of comprehensive or site-specific field investigations. Consultations with the NDDB should not be substituted for on-site surveys required for environmental assessments. Current research projects and new contributors continue to identify additional populations of species and locations of habitats of concern, as well as, enhance existing data. Such new information is incorporated in the NDDB as it becomes available.

Please contact me if you have any questions (shannon.kearney@ct.gov). Thank you for consulting with the Natural Diversity Data Base and continuing to work with us to protect State-listed species.

Sincerely,

/s/ Shannon B. Kearney
Wildlife Biologist