Town of Simsbury

933 HOPMEADOW STREET SIMSBURY, CONNECTICUT 06070

ADDENDUM #1
August 2, 2017

SANITARY SEWER IMPROVEMENTS
MAPLE COURT AND OLD MILL COURT

This addendum form is part of the Invitation to Bid document for the above referenced project and modifies the original document as noted below. Please acknowledge receipt of addenda in the submitted Bid.

Simsbury Water Pollution Control will provide an area for materials at 36 Drake Hill Road as requested by the Contractor. The shoulder of Old Mill Lane adjacent to #85 Firetown Road is an available laydown area for pipe and structures only. All areas utilized for storage of materials shall be restored with topsoil and seed as necessary to achieve conditions equal to or better than pre-construction. Daily storage areas for materials such as stone or sand may be available onsite per prior approval by the Homeowners Association.

DRAWINGS

---

1. Sheet 1

    a. CHANGE: “Replace Existing Conc. CB, Reset Ex. Frame and Grate” to “Remove Frame, Cover and Fill.”
    b. CHANGE: “Reset Ex. Frame and Grate” to “Remove Frame, Cover and Fill.”

2. Sheet 2

    a. Proposed Sanitary Sewer Lateral, #17 Firetown Road
        i. REVISE: Location of existing capped lateral and proposed lateral route.

3. Sheet 4

    a. Maple Court Section A-A
        i. DELETE: “Existing Gutter Profile to Remain”
        ii. DELETE: “Reconstruct Ex. Bit Concrete Swale – Alt. #1
        iii. REVISE: “Extent of Milling, Alt. #1” to include full width from existing concrete sidewalk to existing curb.

PROJECT MANUAL

1. DELETE Division VIII Drainage

END OF ADDENDUM NO. 1

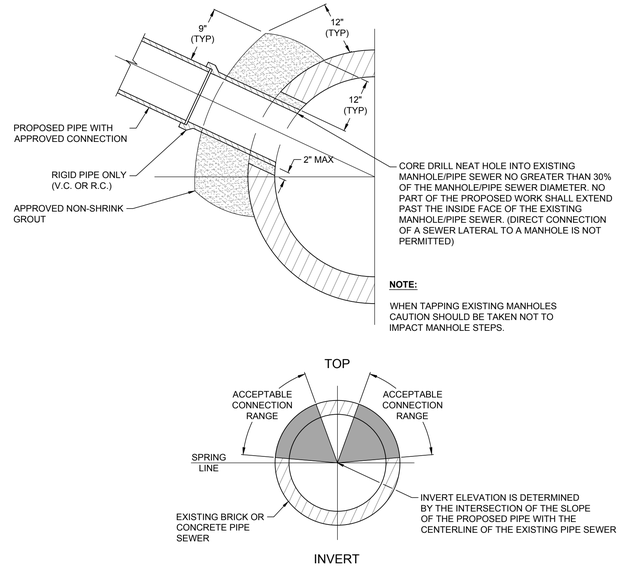

MANHOLE / PIPE SEWER ZONE CONNECTION

N.T.S.

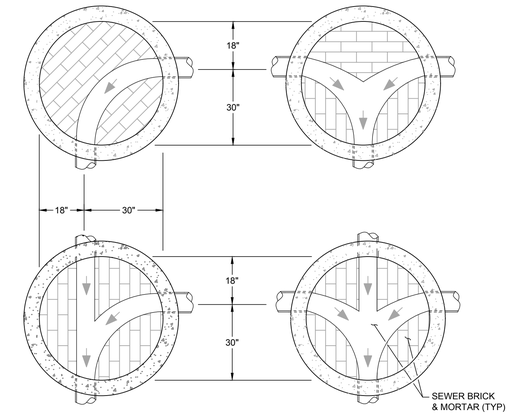

STANDARD NOTES:

1. DIMENSIONS SHOWN FOR STANDARD 48" DIAMETER MANHOLES AND GRAVITY SEWER CONSTRUCTION.

2. MAXIUM CHANGE IN DIRECTION FOR FLOW STREAM SHALL BE 90 DEGREES.

STANDARD MANHOLE INVERTS

N.T.S.

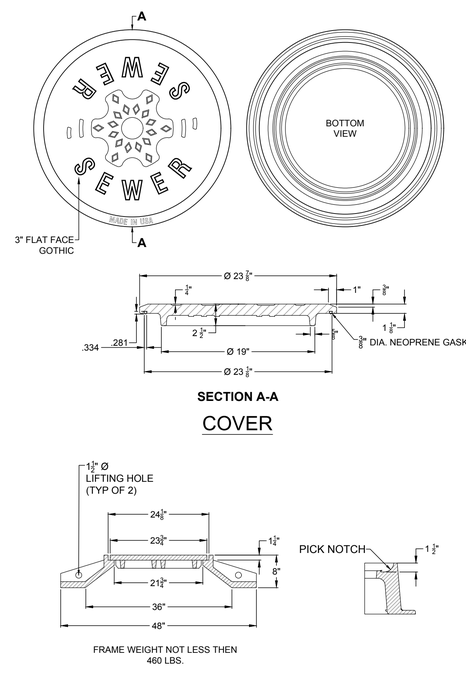

COVER

FRAME

SANITARY SEWER FRAME AND COVER

N.T.S.

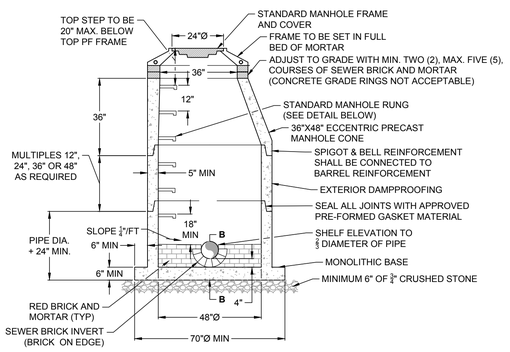

STANDARD NOTES:

1. FLAT SLAB MANHOLE TOPS SHALL NOT BE USED UNLESS AUTHORIZED BY THE WPCA OR ITS TECHNICAL CONSULTANT.

2. ALUMINUM MANHOLE STEPS ARE NOT ACCEPTABLE.

3. THE MINIMUM ELEVATION DROP FROM INVERT IN TO INVERT OUT SHALL BE 0.10 FEET.

4. GROUT THE ENTIRE INSIDE AND OUTSIDE SURFACES OF ALL MANHOLE SECTION JOINTS.

5. RUBBER PLUGS TO BE USED INSIDE MANHOLE SECTION LIFTING HOLES. GROUT THE INSIDE AND OUTSIDE SURFACES OF THE LIFTING HOLES.

6. ROCK TO BE EXCAVATED 10 FEET BEYOND THE WALLS OF THE MANHOLE.

7. WHERE MANHOLES ARE INSTALLED IN CROSS COUNTRY EASEMENT AREAS, THE FRAMES AND COVERS SHALL BE 6" TO 12" ABOVE FINISHED GRADE.

8. INTERIOR MANHOLE LINING SYSTEM TO BE USED AT ALL FORCE MAIN AND LOW PRESSURE SEWER DISCHARGE STRUCTURES.

MANHOLE (SANITARY SEWER)

N.T.S.

NO.	REVISION	DATE	BY
1	ADDENDUM #1		

TOWN OF SIMSBURY
ENGINEERING DEPARTMENT
933 HOPMEADOW STREET
SIMSBURY CONNECTICUT

STANDARD SANITARY
SEWER DETAILS
MAPLE COURT SEWER UPGRADES

DRAWN BY: ADK	CHECKED BY: JFS
DATE: JULY 6, 2017	SCALE: NTS

Det-2

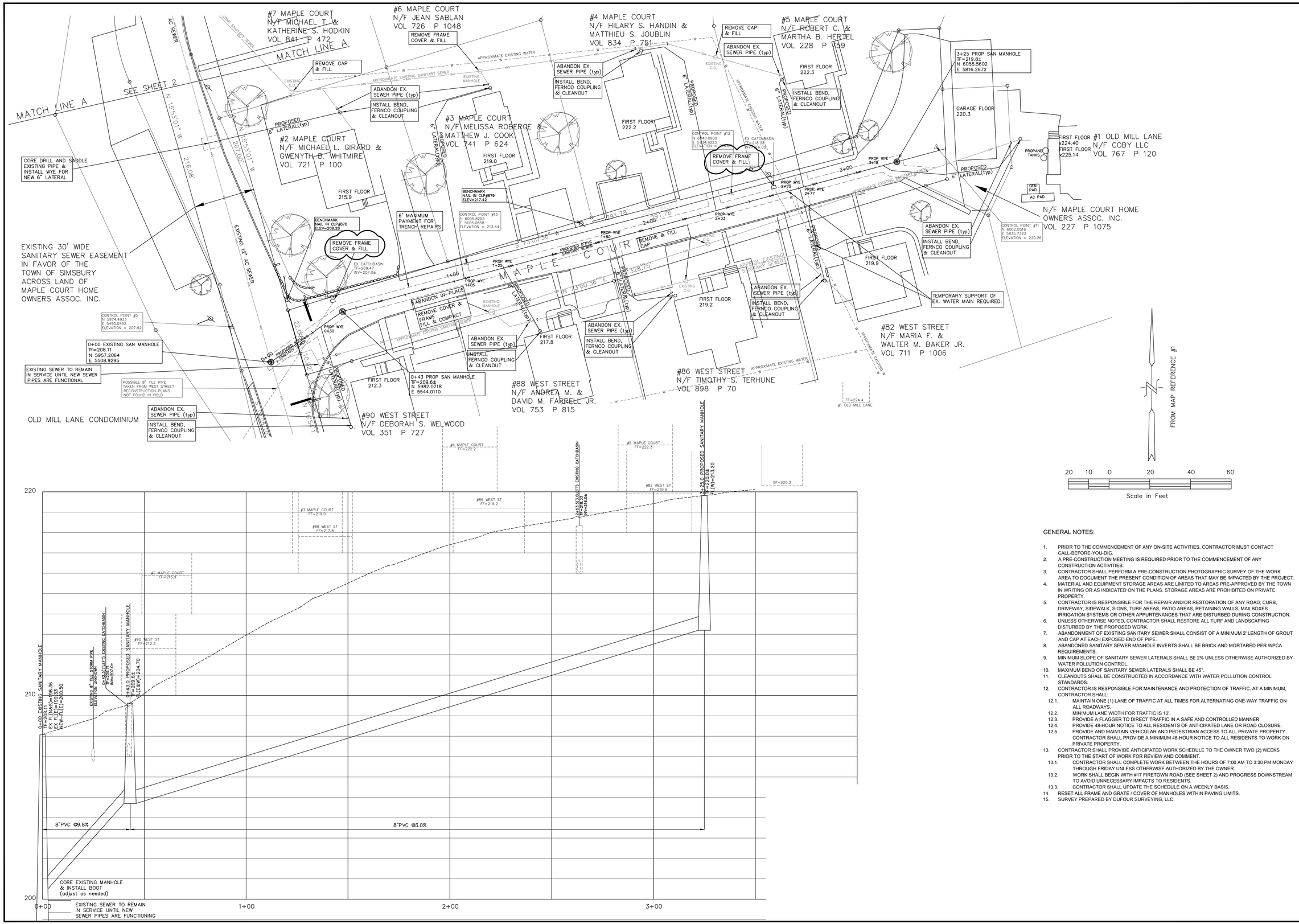

GENERAL NOTES:

1. PRIOR TO THE COMMENCEMENT OF ANY ON-SITE ACTIVITIES, CONTRACTOR MUST CONTACT CALL-BEFORE-YOU-DIG.
2. A PRE-CONSTRUCTION MEETING IS REQUIRED PRIOR TO THE COMMENCEMENT OF ANY CONSTRUCTION ACTIVITIES.
3. CONTRACTOR SHALL PERFORM A PRE-CONSTRUCTION PHOTOGRAPHIC SURVEY OF THE WORK AREA TO DOCUMENT THE PRESENT CONDITION OF AREAS THAT MAY BE IMPACTED BY THE PROJECT.
4. MATERIAL AND EQUIPMENT STORAGE AREAS ARE LIMITED TO AREAS PRE-APPROVED BY THE TOWN IN WRITING OR AS INDICATED ON THE PLANS. STORAGE AREAS ARE PROHIBITED ON PRIVATE PROPERTY.
5. CONTRACTOR IS RESPONSIBLE FOR THE REPAIR AND/OR RESTORATION OF ANY ROAD, CURB, DRIVEWAY, SIDEWALK, SIGNS, TURF AREAS, PATIO AREAS, RETAINING WALLS, MAILBOXES IRRIGATION SYSTEMS OR OTHER APPURTENANCES THAT ARE DISTURBED DURING CONSTRUCTION.
6. UNLESS OTHERWISE NOTED, CONTRACTOR SHALL RESTORE ALL TURF AND LANDSCAPING DISTURBED BY THE PROPOSED WORK.
7. ABANDONMENT OF EXISTING SANITARY SEWER SHALL CONSIST OF A MINIMUM 2' LENGTH OF GROUT AND CAP AT EACH EXPOSED END OF PIPE.
8. ABANDONED SANITARY SEWER MANHOLE INVERTS SHALL BE BRICK AND MORTARED PER WPCA REQUIREMENTS.
9. MINIMUM SLOPE OF SANITARY SEWER LATERALS SHALL BE 2% UNLESS OTHERWISE AUTHORIZED BY WATER POLLUTION CONTROL.
10. MAXIMUM BEND OF SANITARY SEWER LATERALS SHALL BE 45°.
11. CLEANOUTS SHALL BE CONSTRUCTED IN ACCORDANCE WITH WATER POLLUTION CONTROL STANDARDS.
12. CONTRACTOR IS RESPONSIBLE FOR MAINTENANCE AND PROTECTION OF TRAFFIC. AT A MINIMUM, CONTRACTOR SHALL:
    - 12.1. MAINTAIN ONE (1) LANE OF TRAFFIC AT ALL TIMES FOR ALTERNATING ONE-WAY TRAFFIC ON ALL ROADWAYS.
    - 12.2. MINIMUM LANE WIDTH FOR TRAFFIC IS 10'.
    - 12.3. PROVIDE A FLAGGER TO DIRECT TRAFFIC IN A SAFE AND CONTROLLED MANNER.
    - 12.4. PROVIDE 48-HOUR NOTICE TO ALL RESIDENTS OF ANTICIPATED LANE OR ROAD CLOSURE.
    - 12.5. PROVIDE AND MAINTAIN VEHICULAR AND PEDESTRIAN ACCESS TO ALL PRIVATE PROPERTY. CONTRACTOR SHALL PROVIDE A MINIMUM 48-HOUR NOTICE TO ALL RESIDENTS TO WORK ON PRIVATE PROPERTY.
13. CONTRACTOR SHALL PROVIDE ANTICIPATED WORK SCHEDULE TO THE OWNER TWO (2) WEEKS PRIOR TO THE START OF WORK FOR REVIEW AND COMMENT.
    - 13.1. CONTRACTOR SHALL COMPLETE WORK BETWEEN THE HOURS OF 7:00 AM TO 3:30 PM MONDAY THROUGH FRIDAY UNLESS OTHERWISE AUTHORIZED BY THE OWNER.
    - 13.2. WORK SHALL BEGIN WITH #17 FIRETOWN ROAD (SEE SHEET 2) AND PROGRESS DOWNSTREAM TO AVOID UNNECESSARY IMPACTS TO RESIDENTS.
    - 13.3. CONTRACTOR SHALL UPDATE THE SCHEDULE ON A WEEKLY BASIS.
14. RESET ALL FRAME AND GRATE / COVER OF MANHOLES WITHIN PAVING LIMITS.
15. SURVEY PREPARED BY DUFOUR SURVEYING, LLC.

NO.	REVISION	DATE	BY
1	ADDENDUM #1		

TOWN OF SIMSBURY
ENGINEERING DEPARTMENT
933 HOPMEADOW STREET
SIMSBURY CONNECTICUT

PROPOSED SANITARY SEWER
MAPLE COURT

PLAN AND PROFILE

DRAWN BY: ADK	CHECKED BY: JFS
DATE: JULY 6, 2017	SCALE: 1" = 20"

SHEET
1

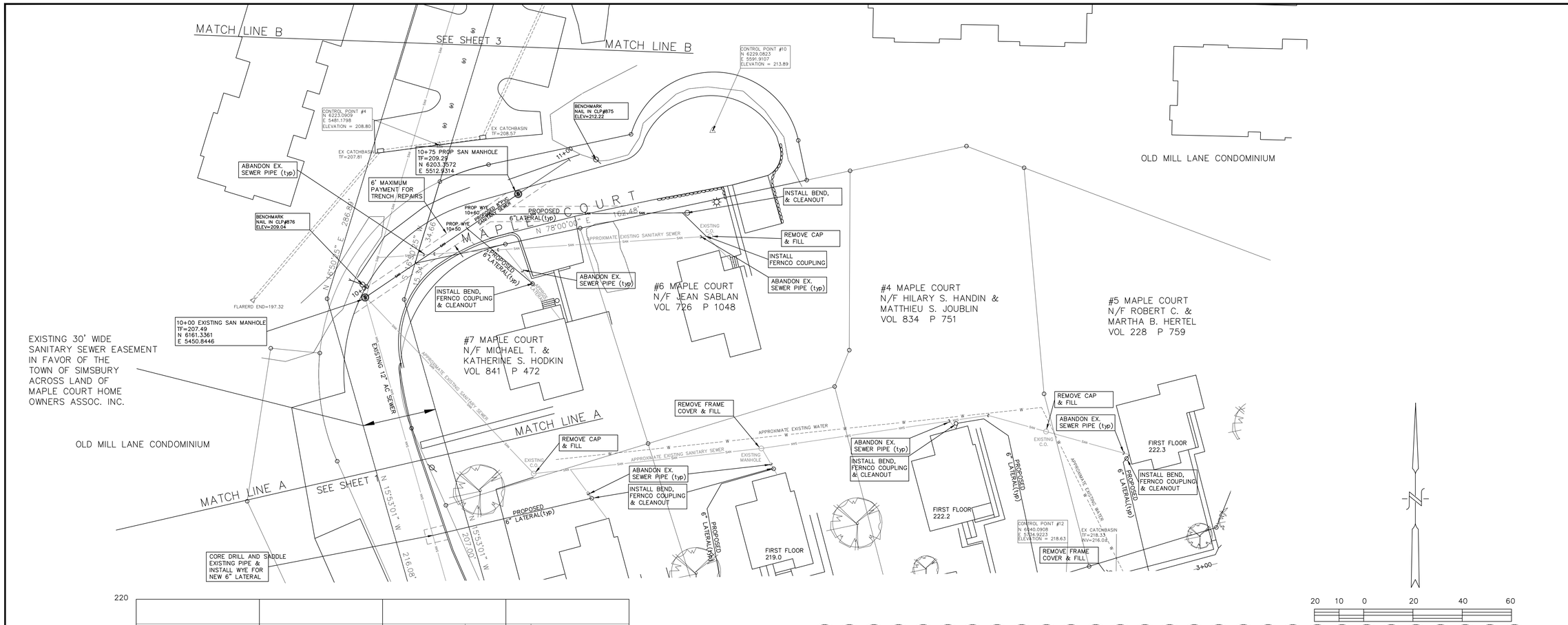

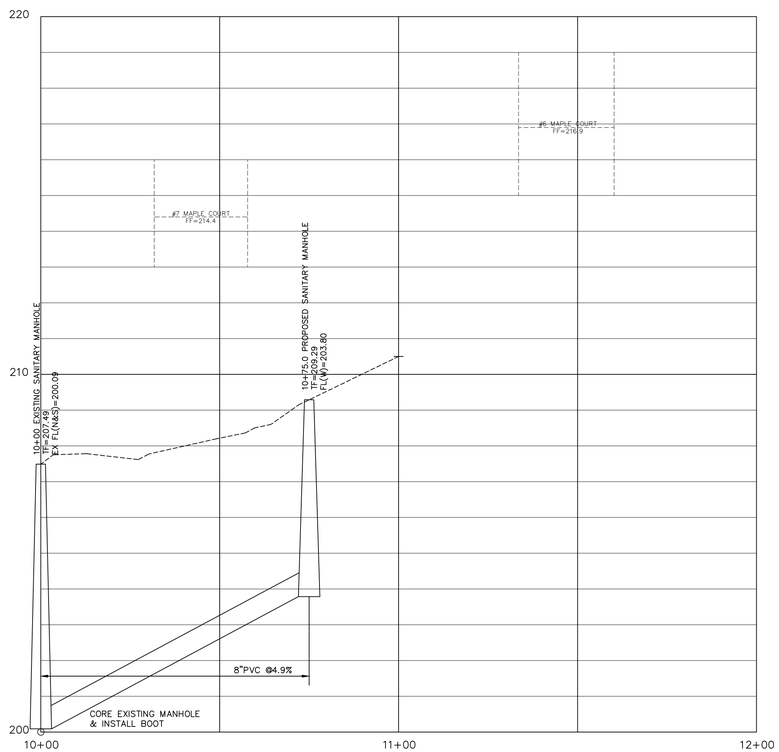

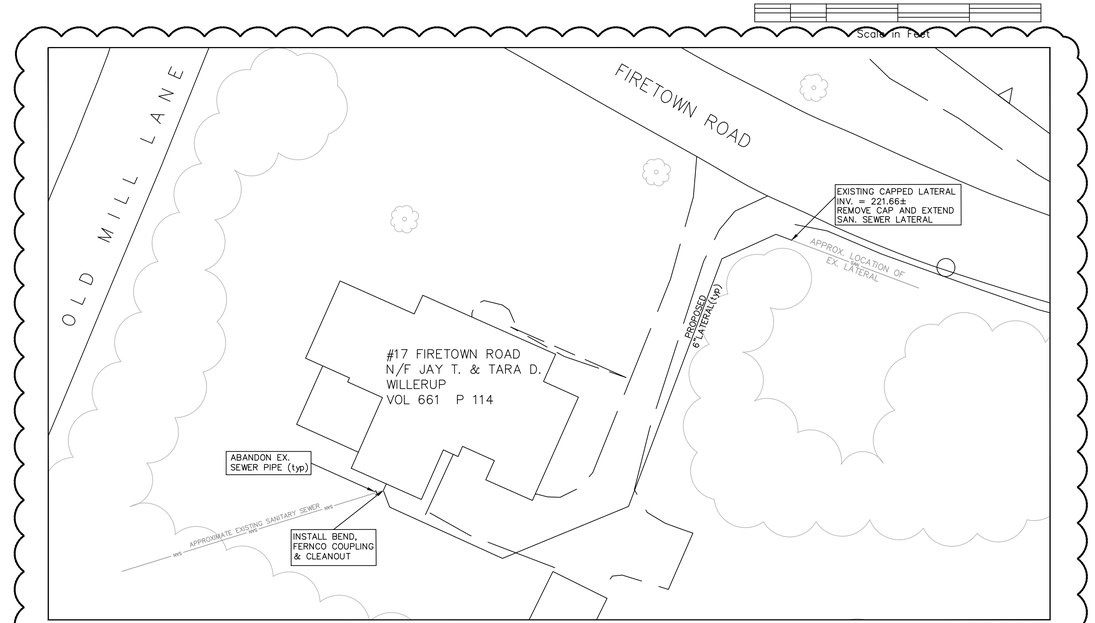

PROPOSED SANITARY SEWER LATERAL
#17 FIRETOWN ROAD

NO.	REVISION	DATE	BY
1	ADDENDUM #1		

TOWN OF SIMSBURY
ENGINEERING DEPARTMENT
933 HOPMEADOW STREET
SIMSBURY CONNECTICUT

PROPOSED SANITARY SEWER
MAPLE COURT

PLAN AND PROFILE

DRAWN BY: ADK	CHECKED BY: JFS
DATE: JUL Y 6, 2017	SCALE: 1" = 20"

SHEET
2

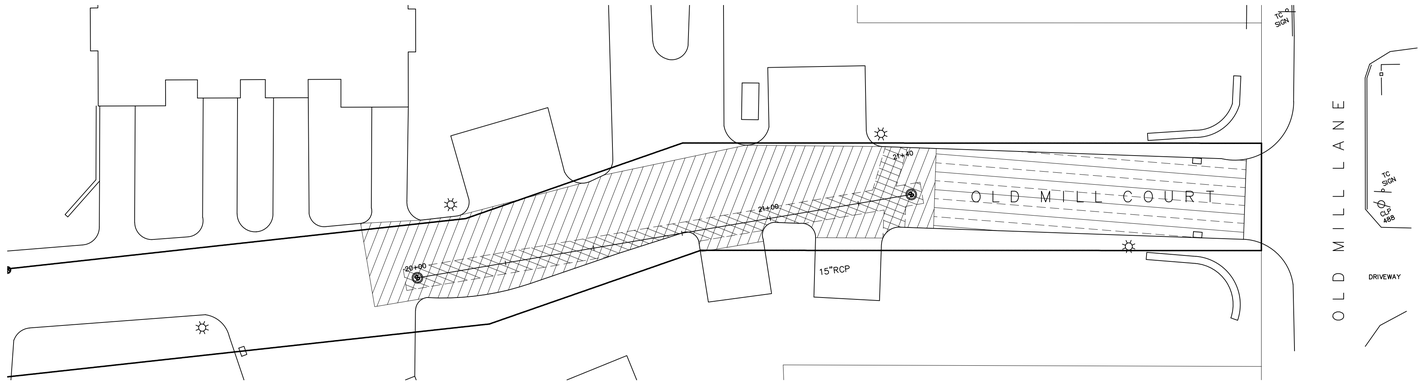

BASE BID:
PERMANENT TRENCH REPAIR PER TOWN STANDARD

ALTERNATE #1:
1-1/2" MILL AND OVERLAY EXISTING PAVEMENT

ALTERNATE #2:
1-1/2" MILL AND OVERLAY EXISTING PAVEMENT

40 20 0 40 80 120
Scale in Feet

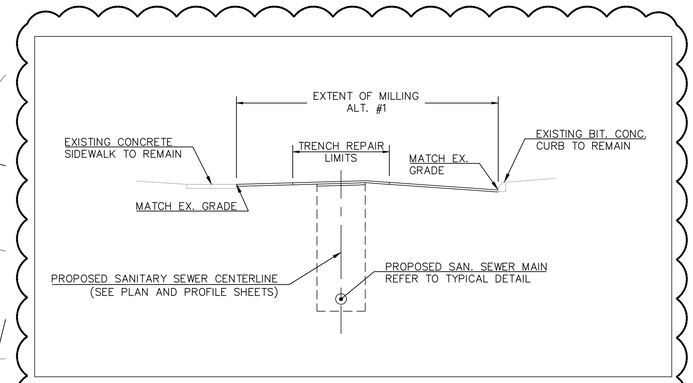

MAPLE COURT SECTION A-A
N.T.S.

NO.	REVISION	DATE	BY
1	ADDENDUM #1		

TOWN OF SIMSBURY
ENGINEERING DEPARTMENT
933 HOPMEADOW STREET
SIMSBURY CONNECTICUT

LIMIT OF PAVING
MAPLE COURT SANITARY SEWER

DRAWN BY: ADK	CHECKED BY: JFS
DATE: MAY 23, 2017	SCALE: 1" = 40'

SHEET
4