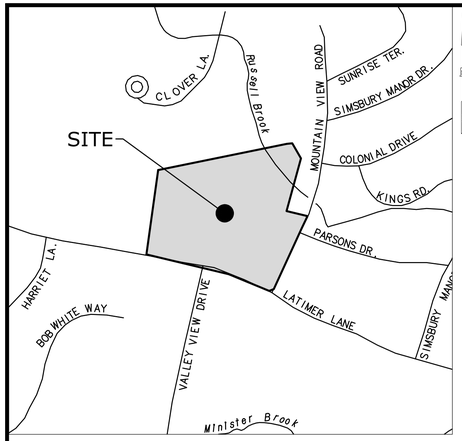

LOCATION MAP:

SCALE 1" = 500'

GENERAL NOTES

1. PROPERTY AND TOPOGRAPHIC INFORMATION TAKEN FROM: A MAP ENTITLED, "IMPROVEMENT LOCATION & TOPOGRAPHIC SURVEY, PORTION OF LATIMER LANE SCHOOL, 33 MOUNTAIN VIEW ROAD, SIMSBURY, CONNECTICUT, PREPARED FOR TECTON ARCHITECTS," SCALE: 1"=40', DATED: NOVEMBER 11, 2021, PREPARED BY: SLR INTERNATIONAL CORPORATION.
2. NORTH ARROW, BEARINGS AND COORDINATES ARE BASED UPON THE CONNECTICUT COORDINATE SYSTEM (NAD 1983). ELEVATIONS, CONTOURS AND BENCH MARK ARE BASED UPON (NAVD 1988)
3. INFORMATION REGARDING THE LOCATION OF EXISTING UTILITIES HAS BEEN BASED UPON AVAILABLE INFORMATION AND MAY BE INCOMPLETE, AND WHERE SHOWN SHOULD BE CONSIDERED APPROXIMATE. THE LOCATION OF ALL EXISTING UTILITIES SHOULD BE CONFIRMED PRIOR TO BEGINNING CONSTRUCTION. CALL "CALL BEFORE YOU DIG", 1-800-922-4455. ALL UTILITY LOCATIONS THAT DO NOT MATCH THE VERTICAL OR HORIZONTAL CONTROL SHOWN ON THE PLANS SHALL IMMEDIATELY BE BROUGHT TO THE ATTENTION OF THE ENGINEER FOR RESOLUTION.
4. SLR INTERNATIONAL CORPORATION ACCEPTS NO RESPONSIBILITY FOR THE ACCURACY OF MAPS AND DATA WHICH HAVE BEEN SUPPLIED BY OTHERS.
5. ALL UTILITY SERVICES ARE TO BE UNDERGROUND. THE EXACT LOCATION, MEANS OF CONSTRUCTION, AND SIZE OF ELECTRIC, TELEPHONE, AND CABLE TELEVISION ARE TO BE DETERMINED BY THE RESPECTIVE UTILITY COMPANIES.
6. ALL DIMENSIONS AND ELEVATIONS SHALL BE VERIFIED IN THE FIELD PRIOR TO CONSTRUCTION. ANY DISCREPANCIES SHALL BE BROUGHT TO THE ATTENTION OF THE ENGINEER.
7. SEDIMENT AND EROSION CONTROL MEASURES AS DEPICTED ON THESE PLANS AND DESCRIBED WITHIN THE SEDIMENT AND EROSION CONTROL NARRATIVE SHALL BE IMPLEMENTED AND MAINTAINED UNTIL PERMANENT COVER AND STABILIZATION IS ESTABLISHED. ALL SEDIMENT AND EROSION CONTROL MEASURES SHALL CONFORM TO THE "GUIDELINES FOR SOIL EROSION AND SEDIMENT CONTROL, CONNECTICUT - 2002". AND IN ALL CASES BEST MANAGEMENT PRACTICES SHALL PREVAIL
8. ALL DISTURBED AREAS SHALL RECEIVE A MINIMUM OF 6" TOPSOIL, AND BE SEEDED WITH GRASS, AS SHOWN ON THE PLANS.
9. ALL PROPOSED CONTOURS AND SPOT ELEVATIONS INDICATE FINISHED GRADE.
10. ALL CONSTRUCTION MATERIALS AND METHODS SHALL CONFORM TO THE TOWN OF SIMSBURY REQUIREMENTS AND TO THE APPLICABLE SECTIONS OF THE STATE OF CONNECTICUT DEPARTMENT OF TRANSPORTATION STANDARD SPECIFICATIONS FOR ROADS, BRIDGES, AND INCIDENTAL CONSTRUCTION, FORM 818 AND ADDENDUMS.
11. THE PLANS REQUIRE A CONTRACTOR'S WORKING KNOWLEDGE OF LOCAL, MUNICIPAL, WATER AUTHORITY, AND STATE CODES FOR UTILITY SYSTEMS. ANY CONFLICTS BETWEEN MATERIALS AND LOCATIONS SHOWN, AND LOCAL REQUIREMENTS SHALL BE BROUGHT TO THE ATTENTION OF THE ENGINEER PRIOR TO THE EXECUTION OF WORK. THE ENGINEER WILL NOT BE HELD LIABLE FOR COSTS INCURRED TO IMPLEMENT OR CORRECT WORK WHICH DOES NOT CONFORM TO LOCAL CODE.
12. ALL FUEL, OIL, PAINT, OR OTHER HAZARDOUS MATERIALS USED DURING CONSTRUCTION SHOULD BE STORED IN A SECONDARY CONTAINER AND REMOVED TO A LOCKED INDOOR AREA WITH AN IMPERVIOUS FLOOR DURING NON-WORK HOURS.
13. COMPLIANCE WITH THE PERMIT CONDITIONS IS THE RESPONSIBILITY OF BOTH THE CONTRACTOR AND THE PERMITTEE.
14. A SANITARY SEWER PERMIT FROM THE TOWN OF SIMSBURY WILL BE REQUIRED AND THE CONTRACTOR SHALL NOTIFY THE TOWN OF SIMSBURY 24 HOURS PRIOR TO ANY SEWER WORK TO SCHEDULE THE REQUIRED INSPECTIONS.
15. A PRE-CONSTRUCTION MEETING, SCHEDULED THROUGH THE TOWN PLANNING DEPARTMENT, SHALL BE HELD PRIOR TO CONSTRUCTION.
16. WETLANDS FLAGGED BY MEGAN RAYMOND OF SLR INTERNATIONAL CORPORATION ON SEPTEMBER 28, 2021.

LEGEND

EXISTING		PROPOSED
	STREET LINE	
	PROPERTY LINE	
	SETBACK LINE	
70	MAJOR CONTOUR	100
68	MINOR CONTOUR	98
× 70.5	SPOT GRADE	+70.5
	TREE LINE	
	TREE/ SHRUB	
	STONEWALL	
	SITE LIGHT	
WV	HYDRANT	
GV	WATER VALVE	WV
	GAS VALVE	GV
	CATCH BASIN	
	MANHOLE/YARD DRAIN	
SAN SAN	SANITARY SEWER W/MANHOLE	SAN
	STORM DRAIN	
W	WATER MAIN	W
G	GAS MAIN	G
E	ELECTRIC LINE	E
ETC	ELECTRIC, TELEPHONE, CABLE	ETC
	UTILITY POLE	
	TRAFFIC SIGN	
	IRON PIPE	
	MONUMENT	
	EDGE OF PAVEMENT W/CURB	
	GUARD RAIL	
	CHAIN LINK FENCE	
	WATERCOURSE	
	WETLAND	

LIST OF DRAWINGS

Tecton ARCHITECTS

SLR
99 REALTY DRIVE
CHESHIRE, CT 06410
203.271.1773
SLRCONSULTING.COM

Client/ Contractor

TOWN OF SIMSBURY

933 HOPMEADOW STREET
SIMSBURY, CT 06070

Project

LATIMER LANE SCHOOL RENOVATION

33 MOUNTAIN VIEW DRIVE
WEATOGUE, CT 06089

PROJECT NORTH

Seals

INLAND WETLANDS SUBMISSION

STATE OF CONNECTICUT · THOMAS J. DALY · 61999 · LICENSED PROFESSIONAL ENGINEER

Issues / Revisions

No.	Date	Description
	01/13/2022	Inland Wetlands Submission

Drawing Title

Existing Conditions

Designed by:	AWG	Project No: 128-0111 RNV
Drawn by:	RH	Scale: 1"=40'
Checked by:	TD	

Drawing Number

C-000

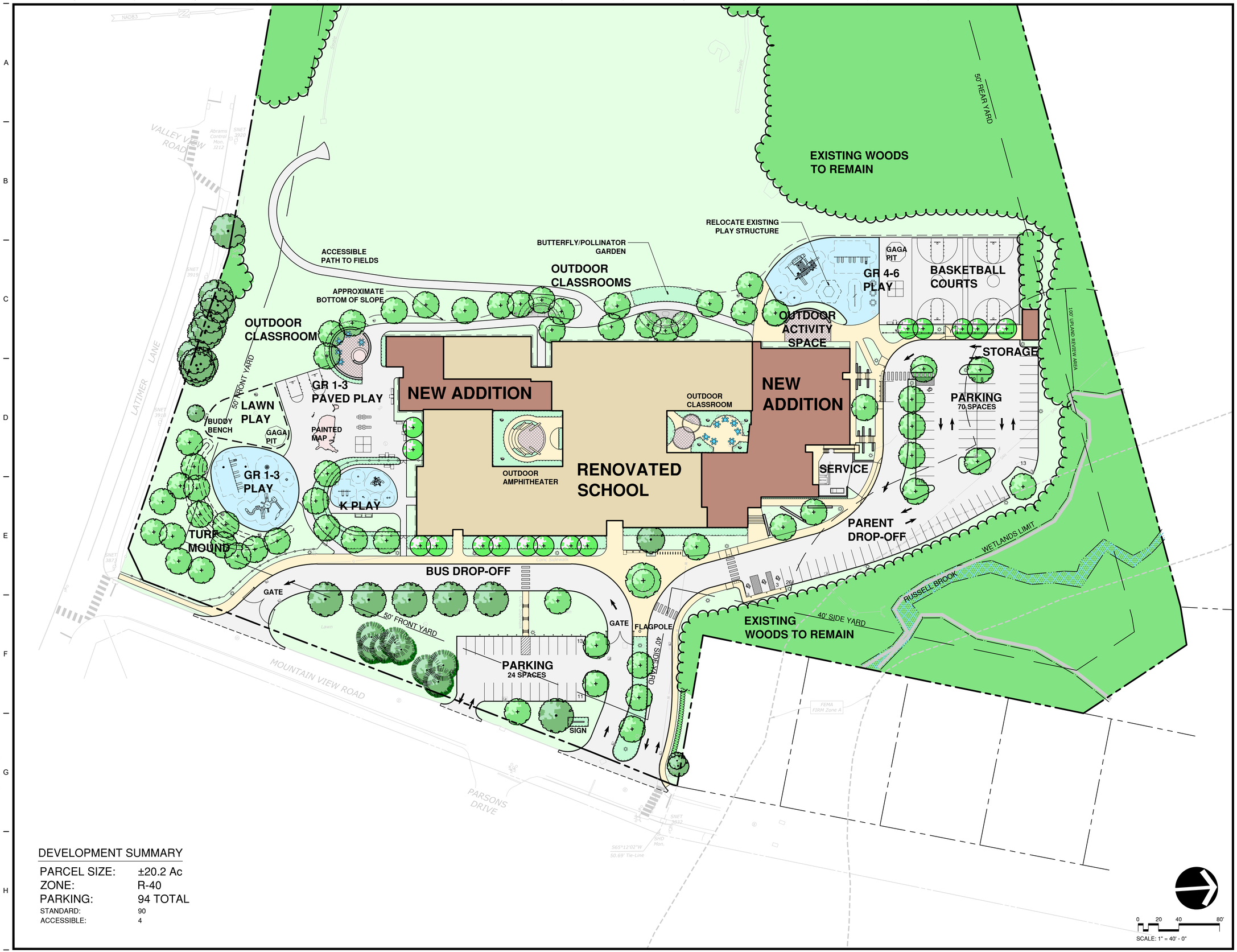

DEVELOPMENT SUMMARY

PARCEL SIZE:	±20.2 Ac
ZONE:	R-40
PARKING:	94 TOTAL
STANDARD:	90
ACCESSIBLE:	4

TectonArchitects

LANDSCAPE ARCHITECT

Richter & Cegan Inc.

8B CANAL COURT
P.O. BOX 567
AVON, CT 06001
PHONE: 860-678-0669

Client/ Contractor

TOWN OF SIMSBURY

933 HOPMEADOW STREET
SIMSBURY, CT 06070

Project

LATIMER LANE SCHOOL RENOVATION

33 MOUNTAIN VIEW DRIVE
WEATOGUE, CT 06089

Seals

STATE OF CONNECTICUT · MICHAEL A. CEGAN · LICENSED LANDSCAPE ARCHITECT · NO. 483

Issues / Revisions

No.	Date	Description
	01/13/2022	Inland Wetlands Submission

Drawing Title

Site Illustrative Plan

Project Manager:	JH	Project No:	SIM01AR
Project Architect:	JH	Production Leader:	AF
Project Designer:	KM	Peer Reviewer:	RA

Drawing Number

L-100

W:\20210143\DESDEV\Main\Inland Wetlands\210143L-100.dwg 01/13/2022 8:34:38 AM jperacchio

C:\Users\CesarR\Documents\SIM01AR_R22_ARCH_cesarrKRQYM.rvt

11/8/2021 10:35:35 AM

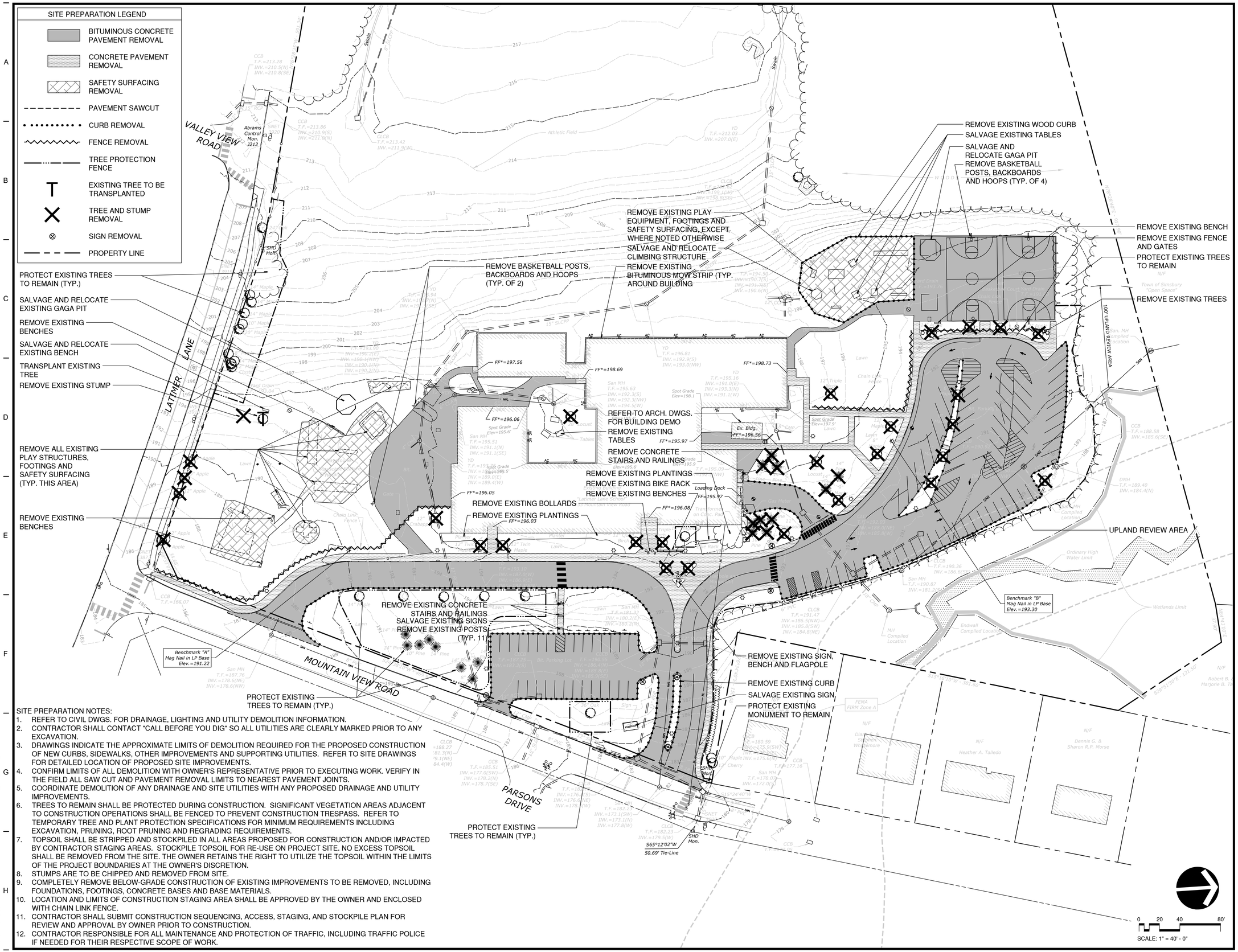

SITE PREPARATION NOTES:

1. REFER TO CIVIL DWGS. FOR DRAINAGE, LIGHTING AND UTILITY DEMOLITION INFORMATION.
2. CONTRACTOR SHALL CONTACT "CALL BEFORE YOU DIG" SO ALL UTILITIES ARE CLEARLY MARKED PRIOR TO ANY EXCAVATION.
3. DRAWINGS INDICATE THE APPROXIMATE LIMITS OF DEMOLITION REQUIRED FOR THE PROPOSED CONSTRUCTION OF NEW CURBS, SIDEWALKS, OTHER IMPROVEMENTS AND SUPPORTING UTILITIES. REFER TO SITE DRAWINGS FOR DETAILED LOCATION OF PROPOSED SITE IMPROVEMENTS.
4. CONFIRM LIMITS OF ALL DEMOLITION WITH OWNER'S REPRESENTATIVE PRIOR TO EXECUTING WORK. VERIFY IN THE FIELD ALL SAW CUT AND PAVEMENT REMOVAL LIMITS TO NEAREST PAVEMENT JOINTS.
5. COORDINATE DEMOLITION OF ANY DRAINAGE AND SITE UTILITIES WITH ANY PROPOSED DRAINAGE AND UTILITY IMPROVEMENTS.
6. TREES TO REMAIN SHALL BE PROTECTED DURING CONSTRUCTION. SIGNIFICANT VEGETATION AREAS ADJACENT TO CONSTRUCTION OPERATIONS SHALL BE FENCED TO PREVENT CONSTRUCTION TRESPASS. REFER TO TEMPORARY TREE AND PLANT PROTECTION SPECIFICATIONS FOR MINIMUM REQUIREMENTS INCLUDING EXCAVATION, PRUNING, ROOT PRUNING AND REGRADING REQUIREMENTS.
7. TOPSOIL SHALL BE STRIPPED AND STOCKPILED IN ALL AREAS PROPOSED FOR CONSTRUCTION AND/OR IMPACTED BY CONTRACTOR STAGING AREAS. STOCKPILE TOPSOIL FOR RE-USE ON PROJECT SITE. NO EXCESS TOPSOIL SHALL BE REMOVED FROM THE SITE. THE OWNER RETAINS THE RIGHT TO UTILIZE THE TOPSOIL WITHIN THE LIMITS OF THE PROJECT BOUNDARIES AT THE OWNER'S DISCRETION.
8. STUMPS ARE TO BE CHIPPED AND REMOVED FROM SITE.
9. COMPLETELY REMOVE BELOW-GRADE CONSTRUCTION OF EXISTING IMPROVEMENTS TO BE REMOVED, INCLUDING FOUNDATIONS, FOOTINGS, CONCRETE BASES AND BASE MATERIALS.
10. LOCATION AND LIMITS OF CONSTRUCTION STAGING AREA SHALL BE APPROVED BY THE OWNER AND ENCLOSED WITH CHAIN LINK FENCE.
11. CONTRACTOR SHALL SUBMIT CONSTRUCTION SEQUENCING, ACCESS, STAGING, AND STOCKPILE PLAN FOR REVIEW AND APPROVAL BY OWNER PRIOR TO CONSTRUCTION.
12. CONTRACTOR RESPONSIBLE FOR ALL MAINTENANCE AND PROTECTION OF TRAFFIC, INCLUDING TRAFFIC POLICE IF NEEDED FOR THEIR RESPECTIVE SCOPE OF WORK.

TectonArchitects

LANDSCAPE ARCHITECT
Richter & Cegan Inc.
8B CANAL COURT
P.O. BOX 567
AVON, CT 06001
PHONE: 860-678-0669

Client/ Contractor

TOWN OF SIMSBURY

933 HOPMEADOW STREET
SIMSBURY, CT 06070

Project

LATIMER LANE SCHOOL RENOVATION

33 MOUNTAIN VIEW DRIVE
WEATOGUE, CT 06089

Seals

STATE OF CONNECTICUT
MICHAEL A. CEGAN
NO. 483
REGISTERED LANDSCAPE ARCHITECT

Issues / Revisions

No.	Date	Description
	01/13/2022	Inland Wetlands Submission

Drawing Title

Site Preparation Plan

Project Manager:	JH	Project No:	SIM01AR
Project Architect:	JH	Production Leader:	AF
Project Designer:	KM	Peer Reviewer:	RA

Drawing Number

L-111

W:\2021\43DESDEV\Main\Inland Wetlands\21014L-111.dwg 01/13/2022 8:34:50 AM jperacchio
C:\Users\CesarR\Documents\SIM01AR_R22_ARCH_cesarrRQYM.rvt
11/8/2021 10:35:35 AM

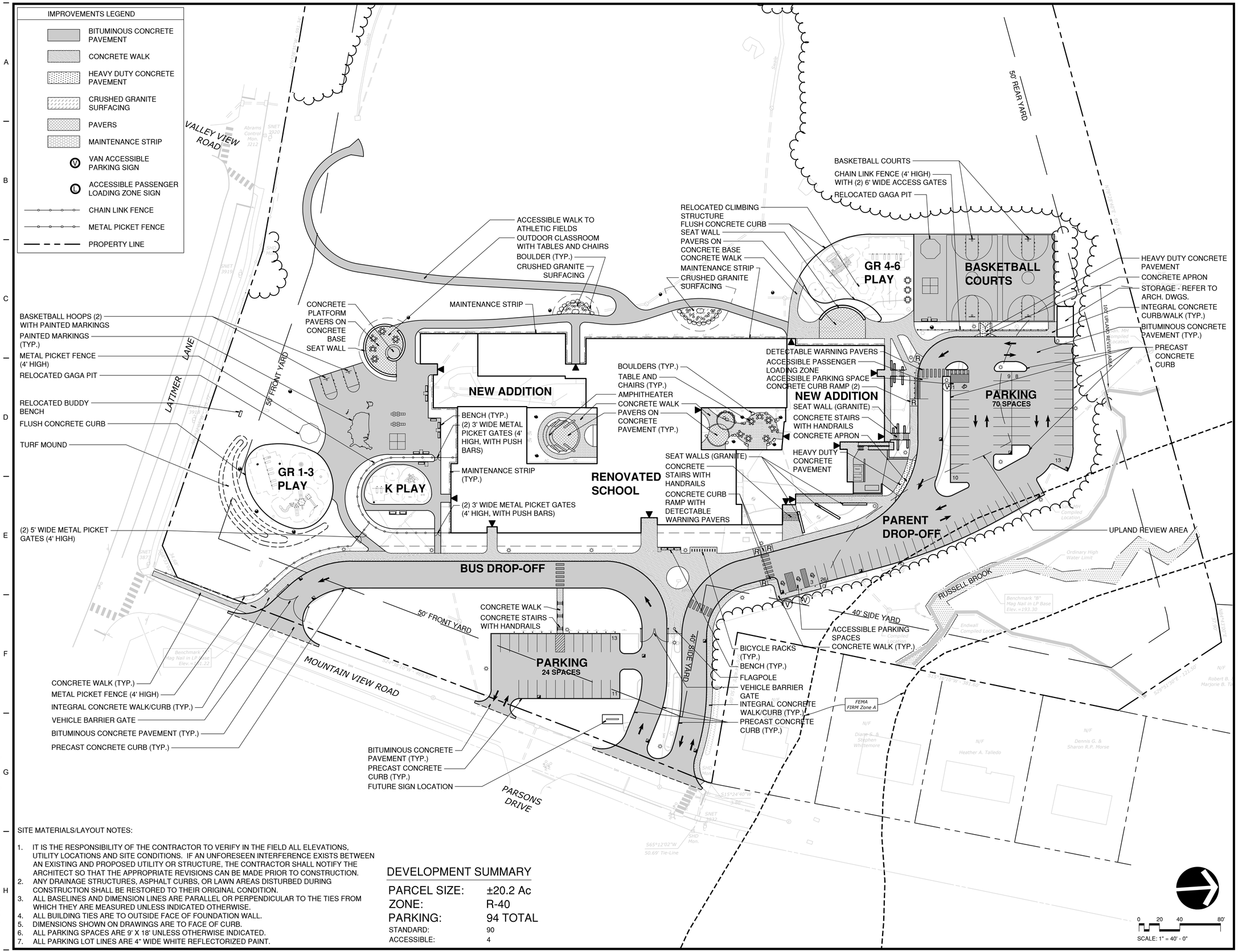

SITE MATERIALS/LAYOUT NOTES:

1. IT IS THE RESPONSIBILITY OF THE CONTRACTOR TO VERIFY IN THE FIELD ALL ELEVATIONS, UTILITY LOCATIONS AND SITE CONDITIONS. IF AN UNFORESEEN INTERFERENCE EXISTS BETWEEN AN EXISTING AND PROPOSED UTILITY OR STRUCTURE, THE CONTRACTOR SHALL NOTIFY THE ARCHITECT SO THAT THE APPROPRIATE REVISIONS CAN BE MADE PRIOR TO CONSTRUCTION.
2. ANY DRAINAGE STRUCTURES, ASPHALT CURBS, OR LAWN AREAS DISTURBED DURING CONSTRUCTION SHALL BE RESTORED TO THEIR ORIGINAL CONDITION.
3. ALL BASELINES AND DIMENSION LINES ARE PARALLEL OR PERPENDICULAR TO THE TIES FROM WHICH THEY ARE MEASURED UNLESS INDICATED OTHERWISE.
4. ALL BUILDING TIES ARE TO OUTSIDE FACE OF FOUNDATION WALL.
5. DIMENSIONS SHOWN ON DRAWINGS ARE TO FACE OF CURB.
6. ALL PARKING SPACES ARE 9' X 18' UNLESS OTHERWISE INDICATED.
7. ALL PARKING LOT LINES ARE 4" WIDE WHITE REFLECTORIZED PAINT.

DEVELOPMENT SUMMARY

PARCEL SIZE:	±20.2 Ac
ZONE:	R-40
PARKING:	94 TOTAL
STANDARD:	90
ACCESSIBLE:	4

TectonArchitects

LANDSCAPE ARCHITECT
Richter & Cegan Inc.
8B CANAL COURT
P.O. BOX 567
AVON, CT 06001
PHONE: 860-678-0669

Client/ Contractor
TOWN OF SIMSBURY

933 HOPMEADOW STREET
SIMSBURY, CT 06070

Project
LATIMER LANE SCHOOL RENOVATION
33 MOUNTAIN VIEW DRIVE
WEATOGUE, CT 06089

Seals

Issues / Revisions

No.	Date	Description
	01/13/2022	Inland Wetlands Submission

Drawing Title
Site Materials / Layout Plan

Project Manager:	JH	Project No:	SIM01AR
Project Architect:	JH	Production Leader:	AF
Project Designer:	KM	Peer Reviewer:	RA

Drawing Number
L-121

W:\2021014\3DESDEV\Main\Inland Wetlands\21014L-121.dwg 01/13/2022 8:35:04 AM jperacchio
C:\Users\CesarR\Documents\SIM01AR_R22_ARCH_cesarrRQYM.rvt
11/8/2021 10:35:35 AM

GRADING LEGEND	
●—●	FLUSH
←∿∿—	DIRECTION OF PITCH
EX	EXISTING ELEVATION TO REMAIN
BC	BOTTOM OF CURB
BR	BOTTOM OF RAMP
BS	BOTTOM OF STAIR
BSS	BOTTOM OF SEAT STEP
BW	BOTTOM OF WALL (FINISH GRADE)
FFE	FINISH FLOOR ELEVATION
GRND	GROUND
HP	HIGH POINT
LP	LOW POINT
TW	TOP OF WALL
TC	TOP OF CURB
TR	TOP OF RAMP
TSS	TOP OF SEAT STEP
WLK	WALK
TF	TOP OF FRAME
TS	TOP OF STAIR
V.I.F.	VERIFY IN FIELD
— — —	PROPERTY LINE

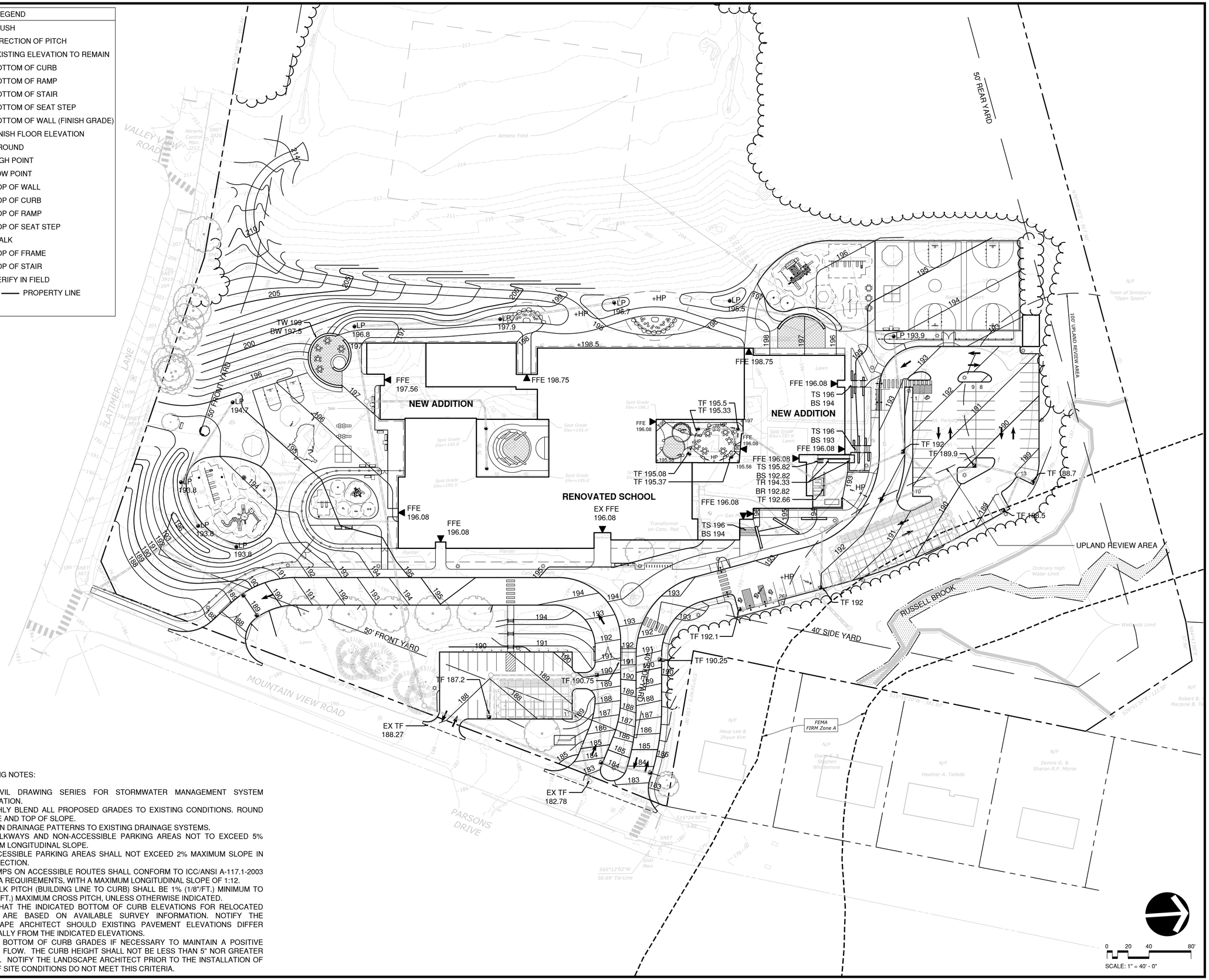

SITE GRADING NOTES:

1. SEE CIVIL DRAWING SERIES FOR STORMWATER MANAGEMENT SYSTEM INFORMATION.
2. SMOOTHLY BLEND ALL PROPOSED GRADES TO EXISTING CONDITIONS. ROUND OFF TOE AND TOP OF SLOPE.
3. MAINTAIN DRAINAGE PATTERNS TO EXISTING DRAINAGE SYSTEMS.
4. ALL WALKWAYS AND NON-ACCESSIBLE PARKING AREAS NOT TO EXCEED 5% MAXIMUM LONGITUDINAL SLOPE.
5. ALL ACCESSIBLE PARKING AREAS SHALL NOT EXCEED 2% MAXIMUM SLOPE IN ANY DIRECTION.
6. ALL RAMPS ON ACCESSIBLE ROUTES SHALL CONFORM TO ICC/ANSI A-117.1-2003 AND ADA REQUIREMENTS, WITH A MAXIMUM LONGITUDINAL SLOPE OF 1:12.
7. SIDEWALK PITCH (BUILDING LINE TO CURB) SHALL BE 1% (1/8"/FT.) MINIMUM TO 2% (1/4"/FT.) MAXIMUM CROSS PITCH, UNLESS OTHERWISE INDICATED.
8. NOTE THAT THE INDICATED BOTTOM OF CURB ELEVATIONS FOR RELOCATED CURBS ARE BASED ON AVAILABLE SURVEY INFORMATION. NOTIFY THE LANDSCAPE ARCHITECT SHOULD EXISTING PAVEMENT ELEVATIONS DIFFER MATERIALLY FROM THE INDICATED ELEVATIONS.
9. ADJUST BOTTOM OF CURB GRADES IF NECESSARY TO MAINTAIN A POSITIVE GUTTER FLOW. THE CURB HEIGHT SHALL NOT BE LESS THAN 5" NOR GREATER THAN 7". NOTIFY THE LANDSCAPE ARCHITECT PRIOR TO THE INSTALLATION OF CURB, IF SITE CONDITIONS DO NOT MEET THIS CRITERIA.

TectonArchitects

LANDSCAPE ARCHITECT

Richter & Cegan Inc.

8B CANAL COURT
P.O. BOX 567
AVON, CT 06001
PHONE: 860-678-0669

Client/ Contractor

TOWN OF SIMSBURY

933 HOPMEADOW STREET
SIMSBURY, CT 06070

Project

LATIMER LANE SCHOOL RENOVATION

33 MOUNTAIN VIEW DRIVE
WEATOGUE, CT 06089

Seals

STATE OF CONNECTICUT · MICHAEL A. ORZ · LICENSED LANDSCAPE ARCHITECT · NO. 483

Issues / Revisions

No.	Date	Description
	01/13/2022	Inland Wetlands Submission

Drawing Title

Site Grading Plan

Project Manager:	JH	Project No:	SIM01AR
Project Architect:	JH	Production Leader:	AF
Project Designer:	KM	Peer Reviewer:	RA

Drawing Number

L-131

W:\2021014\3DES\DEV\Main\Inland Wetlands\21014L-131.dwg 01/13/2022 8:35:14 AM jperacchio

11/8/2021 10:35:35 AM C:\Users\CesarR\Documents\SIM01AR_R22_ARCH_cesarrKRQYM.rvt

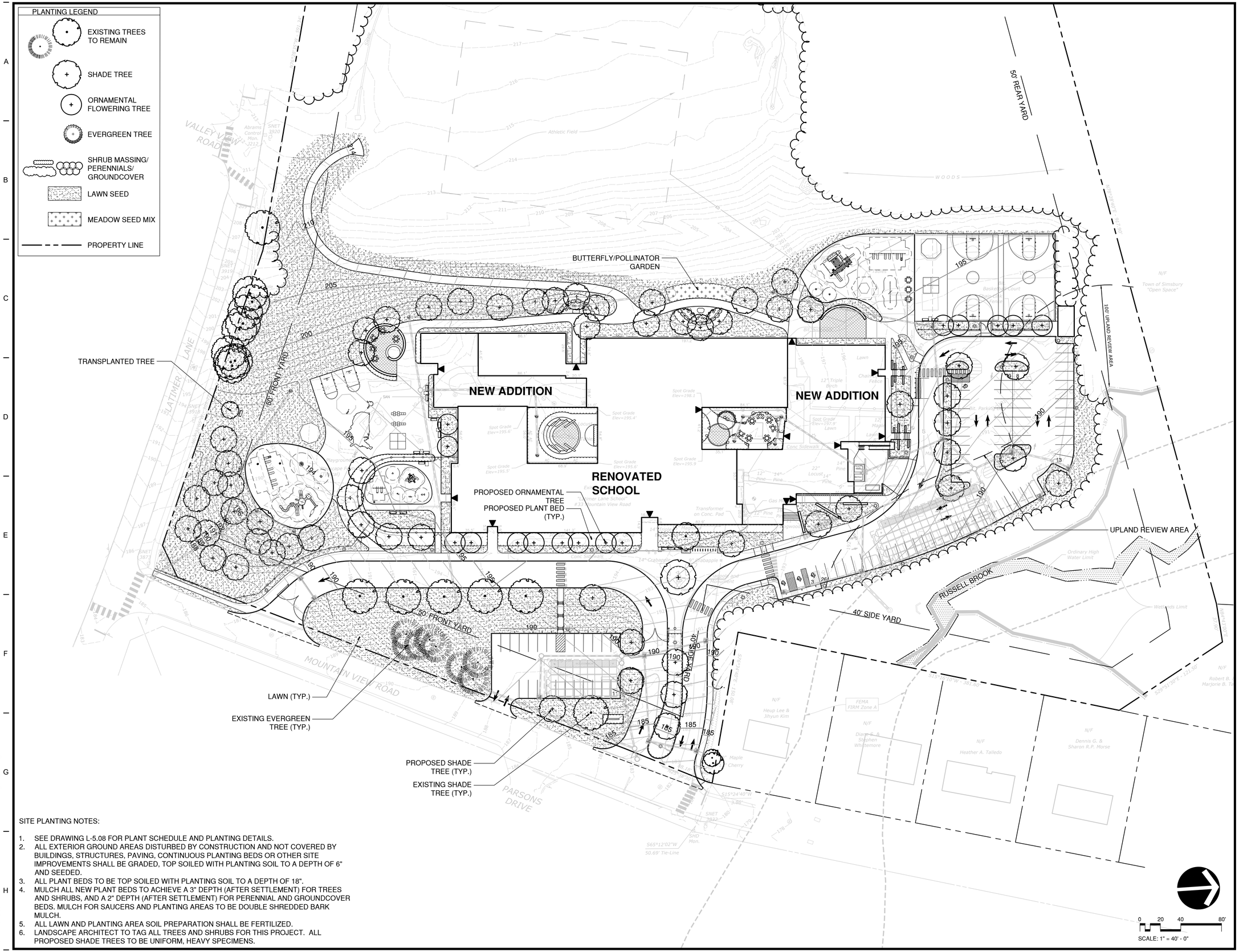

SITE PLANTING NOTES:

1. SEE DRAWING L-5.08 FOR PLANT SCHEDULE AND PLANTING DETAILS.
2. ALL EXTERIOR GROUND AREAS DISTURBED BY CONSTRUCTION AND NOT COVERED BY BUILDINGS, STRUCTURES, PAVING, CONTINUOUS PLANTING BEDS OR OTHER SITE IMPROVEMENTS SHALL BE GRADED, TOP SOILED WITH PLANTING SOIL TO A DEPTH OF 6" AND SEEDED.
3. ALL PLANT BEDS TO BE TOP SOILED WITH PLANTING SOIL TO A DEPTH OF 18".
4. MULCH ALL NEW PLANT BEDS TO ACHIEVE A 3" DEPTH (AFTER SETTLEMENT) FOR TREES AND SHRUBS, AND A 2" DEPTH (AFTER SETTLEMENT) FOR PERENNIAL AND GROUNDCOVER BEDS. MULCH FOR SAUCERS AND PLANTING AREAS TO BE DOUBLE SHREDDED BARK MULCH.
5. ALL LAWN AND PLANTING AREA SOIL PREPARATION SHALL BE FERTILIZED.
6. LANDSCAPE ARCHITECT TO TAG ALL TREES AND SHRUBS FOR THIS PROJECT. ALL PROPOSED SHADE TREES TO BE UNIFORM, HEAVY SPECIMENS.

TectonArchitects

LANDSCAPE ARCHITECT
Richter & Cegan Inc.
8B CANAL COURT
P.O. BOX 567
AVON, CT 06001
PHONE: 860-678-0669

Client/ Contractor
TOWN OF SIMSBURY

933 HOPMEADOW STREET
SIMSBURY, CT 06070

Project
LATIMER LANE SCHOOL RENOVATION
33 MOUNTAIN VIEW DRIVE
WEATOGUE, CT 06089

Seals

Issues / Revisions

No.	Date	Description
	01/13/2022	Inland Wetlands Submission

Drawing Title
Site Planting Plan

Project Manager:	JH	Project No:	SIM01AR
Project Architect:	JH	Production Leader:	AF
Project Designer:	KM	Peer Reviewer:	RA

Drawing Number
L-141

W:\2021014\3DESDEV\Main\Inland Wetlands\210141-141.dwg 01/13/2022 8:35:27 AM jperacchio
C:\Users\CesarR\Documents\SIM01AR_R22_ARCH_cesarrKRQYM.rvt
11/8/2021 10:35:35 AM

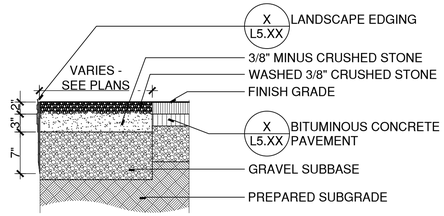

CRUSHED GRANITE SURFACING

SCALE: 1"=1' W:\20210014\3DESDEV\DETAILS\Crushed Granite Surfacing.DWG

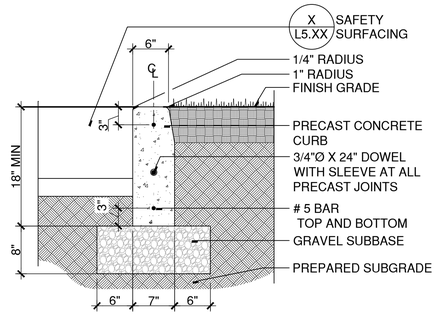

FLUSH CONCRETE CURB

SCALE: 1"=1' W:\2021014\3DESDEV\DETAILS\321613-A.DWG

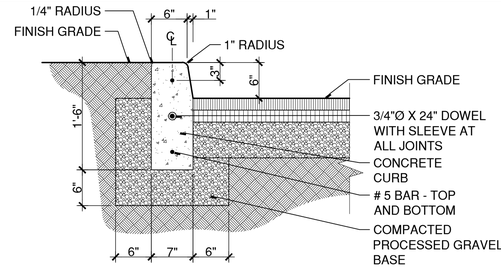

PRECAST CONCRETE CURB

SCALE: 1"=1' W:\20210014\3DESDEV\DETAILS\321613-A1.DWG

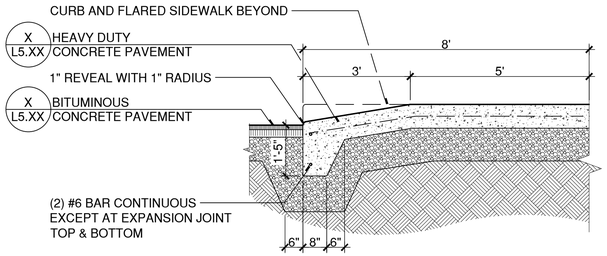

CONCRETE APRON

SCALE: 1/2"=1' W:\20210014\3DESDEV\DETAILS\SERVICE AREA RAMP.DWG

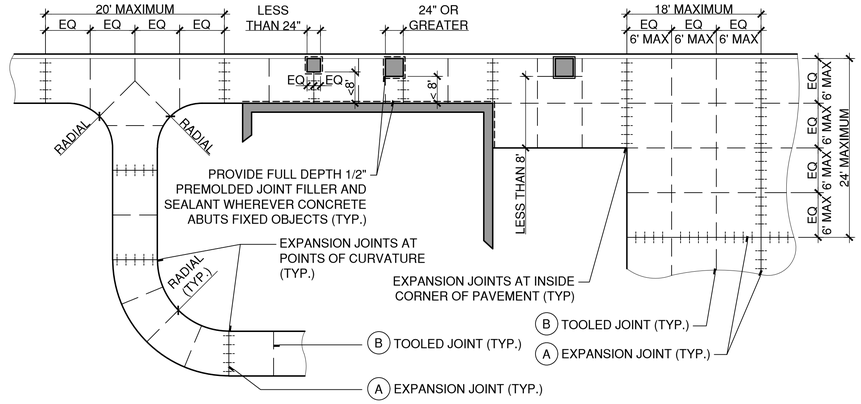

TYPICAL JOINT PLACEMENT IN CONCRETE

SCALE: 1/8"=1' W:\20210014\3DESDEV\DETAILS\321313-C.DWG

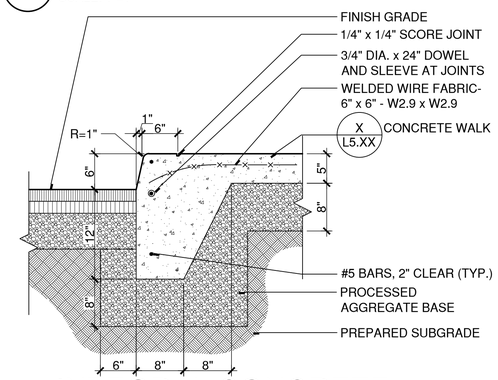

INTEGRAL CONCRETE WALK / CURB

SCALE: 1"=1' W:\20210014\3DESDEV\DETAILS\321613-B.DWG

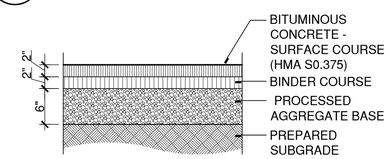

BITUMINOUS CONCRETE PAVEMENT

SCALE: 1"=1' W:\20210014\3DESDEV\DETAILS\321216-B (2).DWG

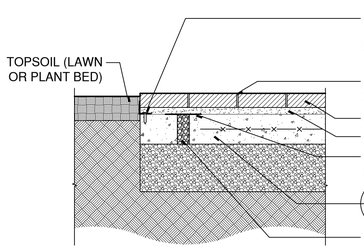

SECTION A: ALUMINUM EDGE CONDITION

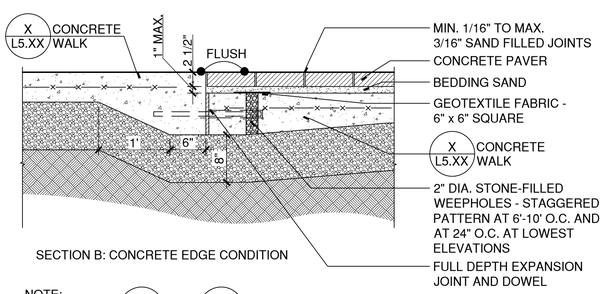

SECTION B: CONCRETE EDGE CONDITION

NOTE:
1. REFER TO (X / L5.XX) AND (X / L5.XX) FOR PAVER LAYOUT.

PAVERS ON CONCRETE BASE

SCALE: 1"=1' W:\20210014\3DESDEV\DETAILS\321413-B.DWG

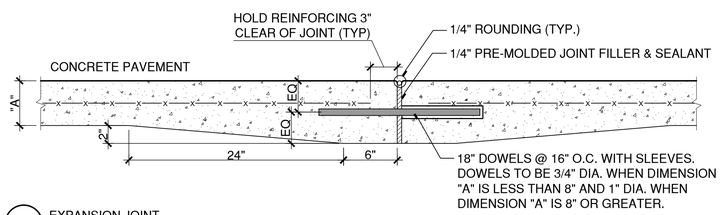

A EXPANSION JOINT
Scale: 1 1/2" = 1'-0"

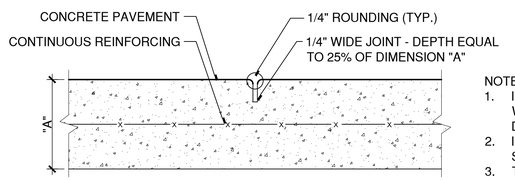

B TOOLED JOINT
Scale: 3" = 1'-0"

NOTES:
1. INSTALL TOOLED JOINTS AT SPACING EQUAL TO THE WALK WIDTH, UP TO A MAXIMUM OF 6 FEET, UNLESS DIMENSIONED OTHERWISE.
2. INSTALL EXPANSION JOINTS WITHIN THE TOOLED JOINT SPACING MODULE UP TO A MAXIMUM SPACING OF 20 FEET.
3. TYPICAL SPACING :

WALK WIDTH	EXPANSION JOINT SPACING
4'	20' (5 PANELS @ 4')
5'	20' (4 PANELS @ 5')
6'	18' (3 PANELS @ 6')

4. INSTALL FULL DEPTH 1/2" PREMOLDED JOINT FILLER AND SEALANT WHEREVER PAVEMENT ABUTS FIXED OBJECTS.
5. SEE TYPICAL JOINT PLACEMENT DETAIL (X / L5.XX)

CONCRETE JOINT DETAILS

SCALE: 1"=1' W:\20210014\3DESDEV\DETAILS\321313-B.DWG

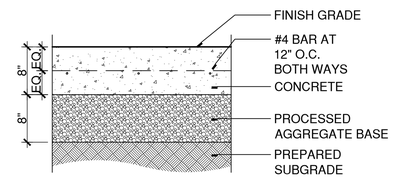

HEAVY DUTY CONCRETE PAVEMENT

SCALE: 1"=1' W:\20210014\3DESDEV\DETAILS\321313-E.DWG

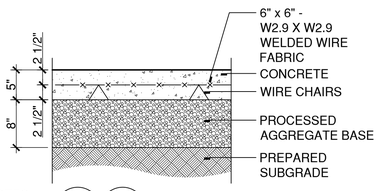

NOTES:
1. SEE (X / L5.XX) (X / L5.XX) FOR JOINT DETAILS AND LOCATIONS.

CONCRETE WALK

SCALE: 1"=1' W:\20210014\3DESDEV\DETAILS\321313-A.DWG

TectonArchitects

LANDSCAPE ARCHITECT
Richter & Cegan Inc.
8B CANAL COURT
P.O. BOX 567
AVON, CT 06001
PHONE: 860-678-0669

Client/ Contractor
TOWN OF SIMSBURY

933 HOPMEADOW STREET
SIMSBURY, CT 06070

Project
LATIMER LANE SCHOOL RENOVATION
33 MOUNTAIN VIEW DRIVE
WEATOGUE, CT 06089

Seals

Issues / Revisions

No.	Date	Description
	01/13/2022	Inland Wetlands Submission

Drawing Title
Site Details

Project Manager:	JH	Project No:	SIM01AR
Project Architect:	JH	Production Leader:	AF
Project Designer:	KM	Peer Reviewer:	RA

Drawing Number
L-501

C:\Users\CesarR\Documents\SIM01AR_R22_ARCH_cesarrKRQYM.rvt
11/8/2021 10:35:35 AM

SINGLE OR DOUBLE LEAF GATES		
NOM HEIGHT (H)	UPRIGHT HT (U)	FRAME HT (F)
WITHOUT BARBED WIRE	ACTUAL DIM	ACTUAL DIM
4'–0" [1219MM]	3'–10" [1168MM]	3'–8 1/2" [1130MM]
5'–0" [1524MM]	4'–10" [1473MM]	4'–8 1/2" [1435MM]
6'–0" [1829MM]	5'–10" [1778MM]	5'–8 1/2" [1740MM]
7'–0" [2134MM]	6'–10" [2083MM]	6'–8 1/2" [2045MM]
8'–0" [2438MM]	7'–10" [2388MM]	7'–8 1/2" [2350MM]
9'–0" [2743MM]	8'–10" [2692MM]	8'–8 1/2" [2654MM]
10'–0" [3048MM]	9'–10" [2997MM]	9'–8 1/2" [2959MM]

DOUBLE LEAF GATES			
GATE WIDTH SINGLE LEAF	GATE POSTS	HINGE SPACE (S)	WEIGHT
FACE TO FACE	RND SIZES	POST TO UPRIGHT	
6'–0" [1829MM] THROUGH 12'–0" [3657MM]	4" [101.6MM]	FOR ROUND GATE POSTS: 2 1/4" [57MM]	9.11 LB/FT (13.6 KG/M)

GATE PLAN

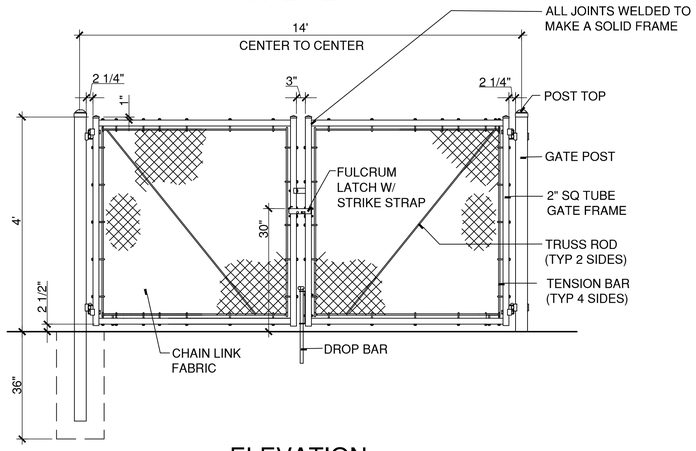

ELEVATION

NOTES:
1. LATCH SHALL COMPLY WITH ADA REQUIREMENTS AND SHALL HAVE A SHAPE EASY TO GRASP WITH ONE HAND AND DOES NOT REQUIRE TIGHT GRASPING, TIGHT PINCHING, OR TWISTING OF THE WRIST TO OPERATE.
2. GATES TO BE ABLE TO OPEN FULL 180 DEGREES.
3. FOOTING WIDTH TO BE 4X POST WIDTH.
4. ALL GATE COMPONENTS TO BE VINYL COATED TO MATCH ADJACENT CHAIN LINK FENCE.
5. PROVIDE PROVISIONS FOR PADLOCKS AT GATES.

CHAIN LINK FENCE GATES

N.T.S.

W:\2021014\3DESDEV\DETAILS\CHAIN LINK GATE.DWG

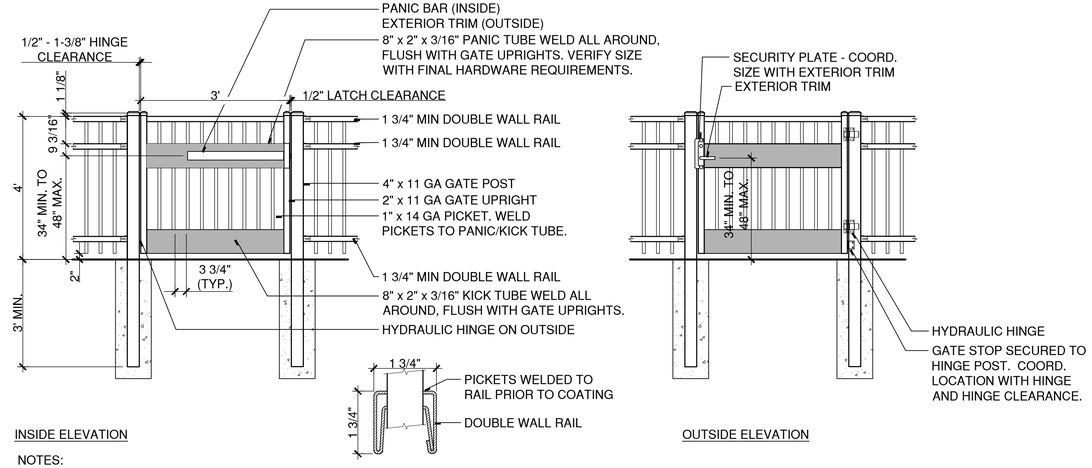

INSIDE ELEVATION

OUTSIDE ELEVATION

NOTES:
1. REFER TO SPECIFICATIONS FOR FINISH AND COLOR REQUIREMENTS.
2. PROVIDE EXTERIOR LATCH IN COORDINATE WITH PANIC BAR AND SECURITY REQUIREMENTS. LATCH SHALL COMPLY WITH ADA REQUIREMENTS AND SHALL HAVE A SHAPE EASY TO GRASP WITH ONE HAND AND DOES NOT REQUIRE TIGHT GRASPING, TIGHT PINCHING, OR TWISTING OF THE WRIST TO OPERATE.
3. PROVIDE KEYED ACCESS AT ALL GATES.
4. GATE SURFACE WITHIN 10 INCHES OF THE FINISH GROUND MEASURED VERTICALLY SHALL HAVE A SMOOTH SURFACE ON THE PUSH SIDE EXTENDING THE FULL WIDTH OF THE GATE. PARTS CREATING HORIZONTAL OR VERTICAL JOINTS IN THESE SURFACES SHALL BE WITHIN 1/16" OF THE SAME PLANE AS THE OTHER. CAVITIES CREATED BY ADDED KICK PLATES SHALL BE CAPPED.
5. GATE STOP: PROVIDE AND INSTALL L-SHAPED BRACKET ON HINGE POST TO PREVENT GATE FROM OPENING PAST 90 DEGREES (TO ENSURE SELF-CLOSING HINGE FEATURE). COLOR/FINISH TO MATCH GATE POST.

METAL PICKET GATE

SCALE: N.T.S.

W:\2021014\3DESDEV\DETAILS\Metal Picket Gate.DWG

DIMENSIONS				
	FENCE HEIGHT	O.D.	NOM. WEIGHT (LBS/FT)	
			TYPE I	TYPE II
RAILS		1.66"	2.27	1.83
LINE POSTS	UP TO 6'	1.900"	2.72	2.28
	OVER 6' UP TO 8'	2.375"	3.65	3.12
TERMINAL POSTS	UP TO 6'	2.375"	3.65	3.12
	OVER 6' UP TO 8'	2.875"	5.79	4.64

NOTE:
1. ALL FENCE COMPONENTS TO BE VINYL COATED. COLOR TO BE SELECTED BY LANDSCAPE ARCHITECT.

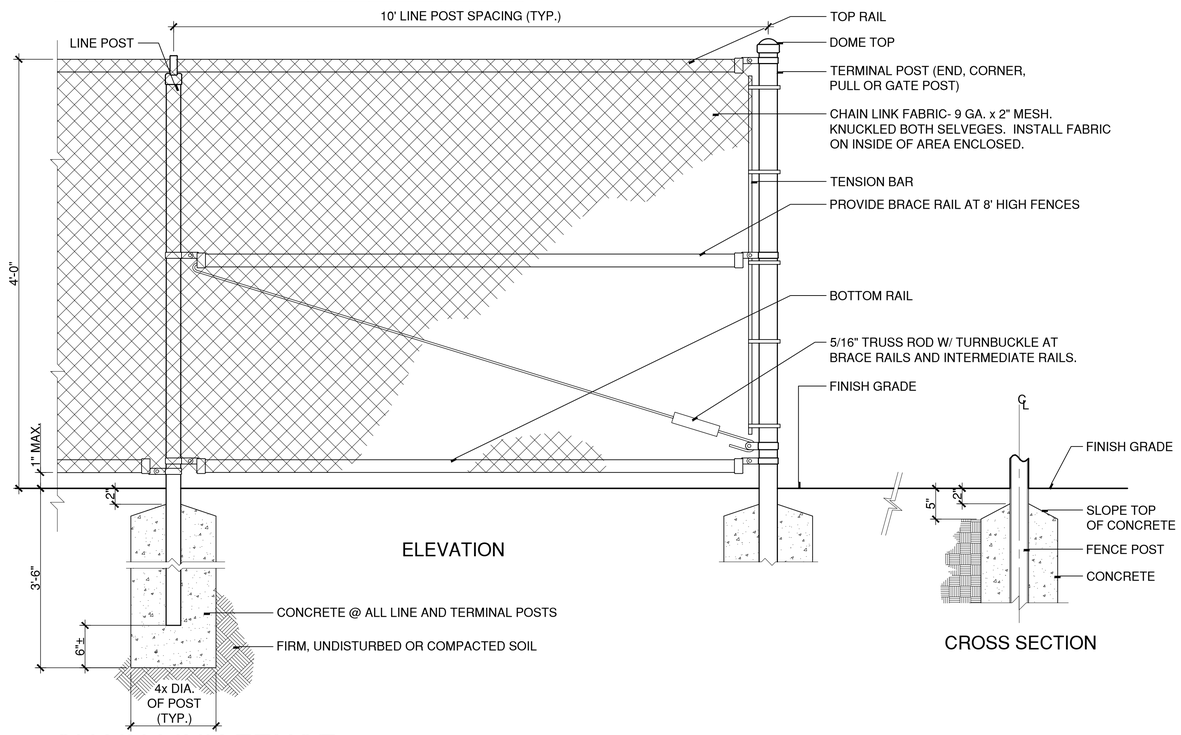

ELEVATION

CROSS SECTION

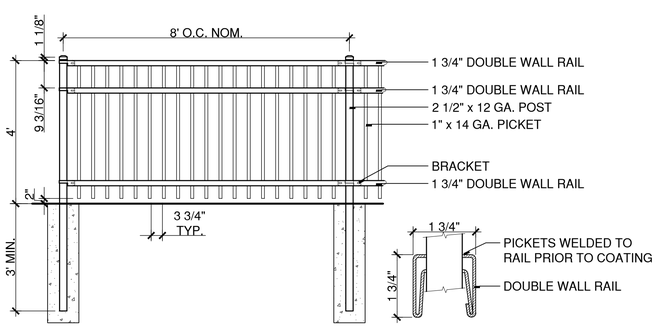

METAL PICKET FENCE

SCALE: N.T.S.

NOTES: REFER TO SPECIFICATIONS FOR FINISH AND COLOR REQUIREMENTS.

w:\2021014\3DESDEV\DETAILS\Metal Picket Fence.DWG

CHAIN LINK FENCE

N.T.S.

W:\2021014\3DESDEV\DETAILS\323113-A.DWG

TectonArchitects

LANDSCAPE ARCHITECT

Richter & Cegan Inc.

8B CANAL COURT
P.O. BOX 567
AVON, CT 06001
PHONE: 860-678-0669

Client/ Contractor

TOWN OF SIMSBURY

933 HOPMEADOW STREET
SIMSBURY, CT 06070

Project

LATIMER LANE SCHOOL RENOVATION

33 MOUNTAIN VIEW DRIVE
WEATOGUE, CT 06089

Seals

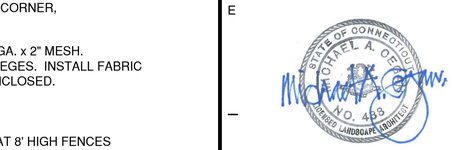

Issues / Revisions

No.	Date	Description
	01/13/2022	Inland Wetlands Submission

Drawing Title

Site Details

Project Manager:	JH	Project No:	SIM01AR
Project Architect:	JH	Production Leader:	AF
Project Designer:	KM	Peer Reviewer:	RA

Drawing Number

L-504

C:\Users\CesarR\Documents\SIM01AR_R22_ARCH_cesarrKRXYM.rvt

11/8/2021 10:35:35 AM

PLANT SCHEDULE

CATEGORY	SYM	BOTANICAL NAME	COMMON NAME	SIZE	COMMENTS
TREES	AG	AMELANCHIER GRANDIFLORA 'AUTUMN BRILLIANCE'	AUTUMN BRILLIANCE SERVICEBERRY	3-3 1/2" CAL	B&B
	AR	ACER RUBRUM 'RED SUNSET'	RED MAPLE	3-3 1/2" CAL	B&B
	AS	ACER SACHARINUM 'LEGACY'	SUGAR MAPLE	3-3 1/2" CAL	B&B
	BND	BETULA NIGRA 'DURA HEAT'	DURA HEAT RIVER BIRCH	14-16' HT. MULTI-STEM	B&B, MIN. 3-5 TRUNKS, FULL SPECIMEN
	CFP	CORNUS FLORIDA 'CHEROKEE PRINCESS'	CHEROKEE PRINCESS DOGWOOD	3-3 1/2" CAL	B&B
	PI	PRUNUS X INCAM 'OKAME'	OKAME FLOWERING CHERRY	3-3 1/2" CAL	B&B, HEAVY
	QP	QUERCUS PALUSTRIS	PIN OAK	3-3 1/2" CAL	B&B, UNIFORM, HIGH BRANCHED TO 6'
	QR	QUERCUS RUBRA	RED OAK	3-3 1/2" CAL	B&B
	TC	TILIA CORDATA 'GREENSPIRE'	LITTLE LEAF LINDEN	3-3 1/2" CAL	B&B
	UP	ULMUS PAVIFOLIA 'ALLEE'	ALLEE CHINESE ELM	3-3 1/2" CAL	B&B, UNIFORM, HIGH BRANCHED TO 6'
SHRUBS (DECIDUOUS)	CA	CLETHRA ALNIFOLIA VARIETIES	SUMMER SWEET	24-30"	CONTAINER
	HQP	HYDRANGEA QUERCIFOLIA SPECIES	HYDRANGEA	24-30"	B&B OR CONTAINER
	IV	ITEA VIRGINICA 'HENRY'S GARNET'	HENRY'S GARNET VIRGINIA SWEETSPIRE	24-30"	B&B OR CONTAINER
	IVL	ITEA VIRGINICA 'LITTLE HENRY'	LITTLE HENRY VIRGINIA SWEETSPIRE	18-24"	B&B OR CONTAINER
	MP	MYRICA PENNSYLVANICA	NORTHERN BAYBERRY	24-36"	B&B OR CONTAINER
	RA	RHUS AROMATICA 'GRO LOW'	GRO LOW FRAGRANT SUMAC	24-30"	CONTAINER
SHRUBS (EVERGREEN)	ICS	ILEX CRENATA VARIETIES	JAPANESE HOLLY	3-3 1/2' HT.	B&B, FULL
	IGC	ILEX GLABRA VARIETIES	INKBERRY HOLLY	24-30"	B&B OR CONTAINER
	JH	JUNIPERUS HORIZONTALIS 'BAR HARBOR'	BAR HARBOR CREEPING JUNIPER	15-18" SPD.	CONTAINER
	KL	KALMIA LATIFOLIA VARIETIES	MOUNTAIN LAUREL	24-30"	B&B OR CONTAINER
	MD	MICROBIOTA DECUSSATA	RUSSIAN ARBORVITAE	18-24" SPD.	B&B OR CONTAINER
	RY	RHODODENDRON VARIETIES	RHODODENDRON	24-30"	B&B OR CONTAINER
PERENNIALS AND GROUNDCOVERS	an	ASTER VARIETIES	ASTER	1 GAL.	CONTAINER @ 24" O.C.
	at	ASCLEPIAS TUBEROSA	BUTTERFLY MILKWEED	1 GAL.	CONTAINER @ 24" O.C.
	cak	CALAMAGROSTIS X ACUTIFOLIA 'KARL FORESTER'	KARL FORESTER FEATHER REED GRASS	1 GAL.	CONTAINER @ 18" O.C.
	efc	EUONYMUS FORTUNEI 'COLORATUS	WINTERCREEPER	#1 CONT.	CONTAINER @ 15" O.C.
	fg	FESTUCA GLAUCA 'ELIJAH BLUE'	BLUE FESCUE	1 GAL.	CONTAINER @ 15" O.C.
	ha	HEUCHERA VARIETIES	CORAL BELLS	1 GAL.	CONTAINER @ 24" O.C.
	he	HEMEROCALLIS VARIETIES	DAYLILY	1 GAL.	CONTAINER @ 24" O.C.
	hse	HOSTA VARIETIES	HOSTA	1 GAL.	CONTAINER @ 24" O.C.
	lm	LIRIOPE MUSCARI 'BIG BLUE'	LILY TURF	1 GAL.	CONTAINER @ 12" O.C.
	oc	OSMUNDA CINNAMOMEA	CINNAMON FERN	1 GAL.	CONTAINER @ 36" O.C.
	pa	POLYSTICHUM ACROSTICHOIDES	CHRISTMAS FERN	1 GAL.	CONTAINER @ 24" O.C.
	pah	PENNISETUM ALOPECUROIDES 'HAMELN'	DWARF FOUNTAIN GRASS	1 GAL.	CONTAINER @ 24" O.C.
	pt	PACHYSANDRA TERMINALIS	SPURGE	2 YR. ROOTED CUTTING	6" O.C.
	pvr	PANICUM VIRGATUM 'RUBY RIBBONS'	SWITCHGRASS	1 GAL.	CONTAINER @ 24" O.C.
	rf	RUDBECKIA VARIETIES	BLACK-EYED SUSAN	1 GAL.	CONTAINER @ 24" O.C.
	ss	SCHIZACHYRIUM SCOPARIUM 'THE BLUES'	LITTLE BLUESTEM	1 GAL.	CONTAINER @ 24" O.C.

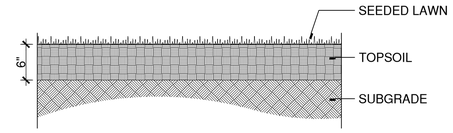

SEEDED LAWN
SCALE: N.T.S. W:\2021014\3DESDEV\DETAILS\329200-C.DWG

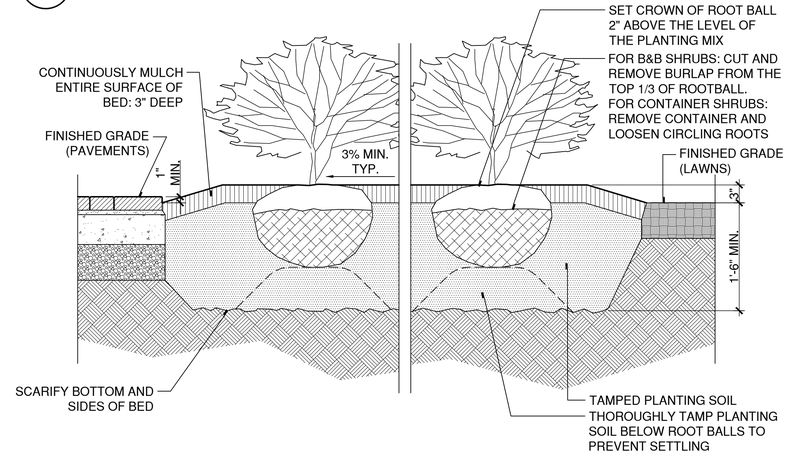

CONTINUOUS PLANTING BED FOR SHRUBS
SCALE: N.T.S. W:\2021014\3DESDEV\DETAILS\329300-B.DWG

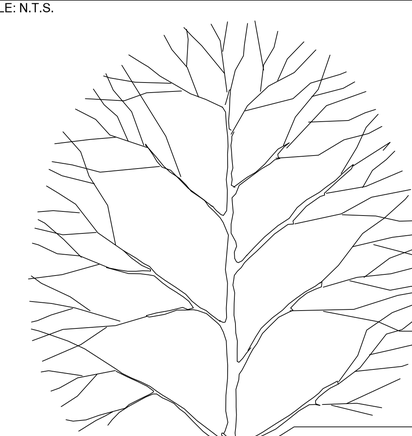

NOTES:
1. SET TREE PLUMB PRIOR TO STAKING OR GUYING.
2. THIS DETAIL ILLUSTRATES THE MINIMUM REQUIRED STAKING OR GUYING SYSTEM. PROVIDE ADDITIONAL STAKES OR GUYS IF REQUIRED DUE TO FIELD CONDITIONS OR SIZE OF TREE.
3. SET ROOT FLARE 3" ABOVE FINISHED GRADE.

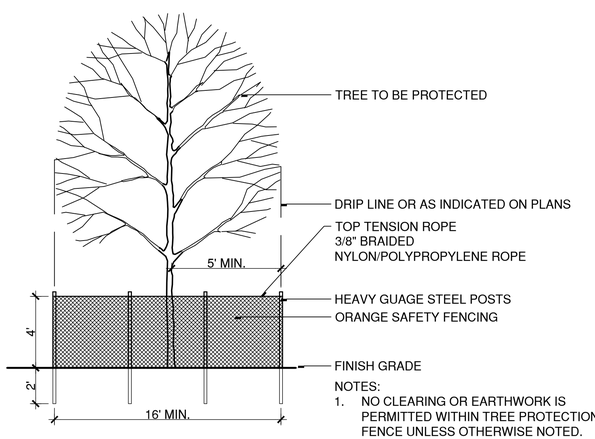

NOTES:
1. NO CLEARING OR EARTHWORK IS PERMITTED WITHIN TREE PROTECTION FENCE UNLESS OTHERWISE NOTED.
2. NO STOCKPILING OF MATERIALS OR EQUIPMENT IS PERMITTED WITHIN TREE PROTECTION FENCE

TREE PROTECTION FENCE
SCALE: N.T.S. W:\2021014\3DESDEV\DETAILS\015639-A.DWG

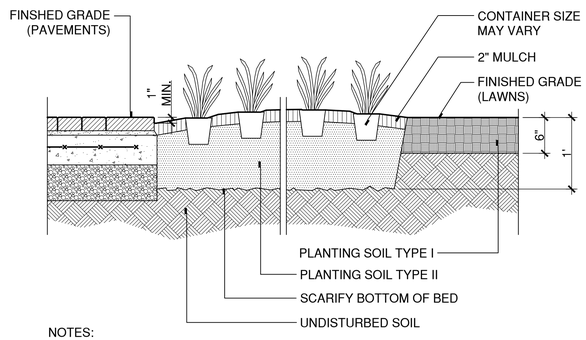

NOTES:
1. SET CROWN OF ROOT BALL LEVEL WITH FINISH GRADE.
2. MAINTAIN MINIMUM OF 4" PLANTING SOIL BELOW EACH INDIVIDUAL PLANT.
3. MULCH ENTIRE AREA OF GROUNDCOVER, PERENNIALS OR ANNUALS.
4. MULCH CAREFULLY AROUND EACH PLANT. DO NOT COVER CROWNS OF PLANTS WITH MULCH.

GROUNDCOVERS / PERENNIALS CONTINUOUS PLANTING BED
SCALE: N.T.S. W:\2021014\3DESDEV\DETAILS\329300-C.DWG

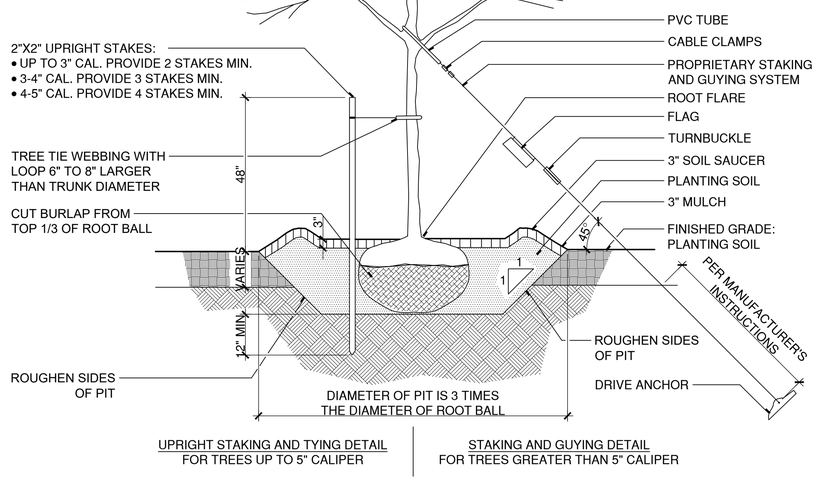

UPRIGHT STAKING AND TYING DETAIL
FOR TREES UP TO 5" CALIPER

STAKING AND GUYING DETAIL
FOR TREES GREATER THAN 5" CALIPER

TREE PLANTING WITH TRUNK STABILIZATION
SCALE: N.T.S. W:\2021014\3DESDEV\DETAILS\329300-A.DWG

TectonArchitects

LANDSCAPE ARCHITECT
Richter & Cegan Inc.
8B CANAL COURT
P.O. BOX 567
AVON, CT 06001
PHONE: 860-678-0669

Client/ Contractor
TOWN OF SIMSBURY

933 HOPMEADOW STREET
SIMSBURY, CT 06070

Project
LATIMER LANE SCHOOL RENOVATION
33 MOUNTAIN VIEW DRIVE
WEATOGUE, CT 06089

Seals

Issues / Revisions

No.	Date	Description
	01/13/2022	Inland Wetlands Submission

Drawing Title
Site Details

Project Manager:	JH	Project No:	SIM01AR
Project Architect:	JH	Production Leader:	AF
Project Designer:	KM	Peer Reviewer:	RA

Drawing Number
L-508

C:\Users\CesarR\Documents\SIM01AR_R22_ARCH_cesarrKRQYM.rvt
11/8/2021 10:35:35 AM

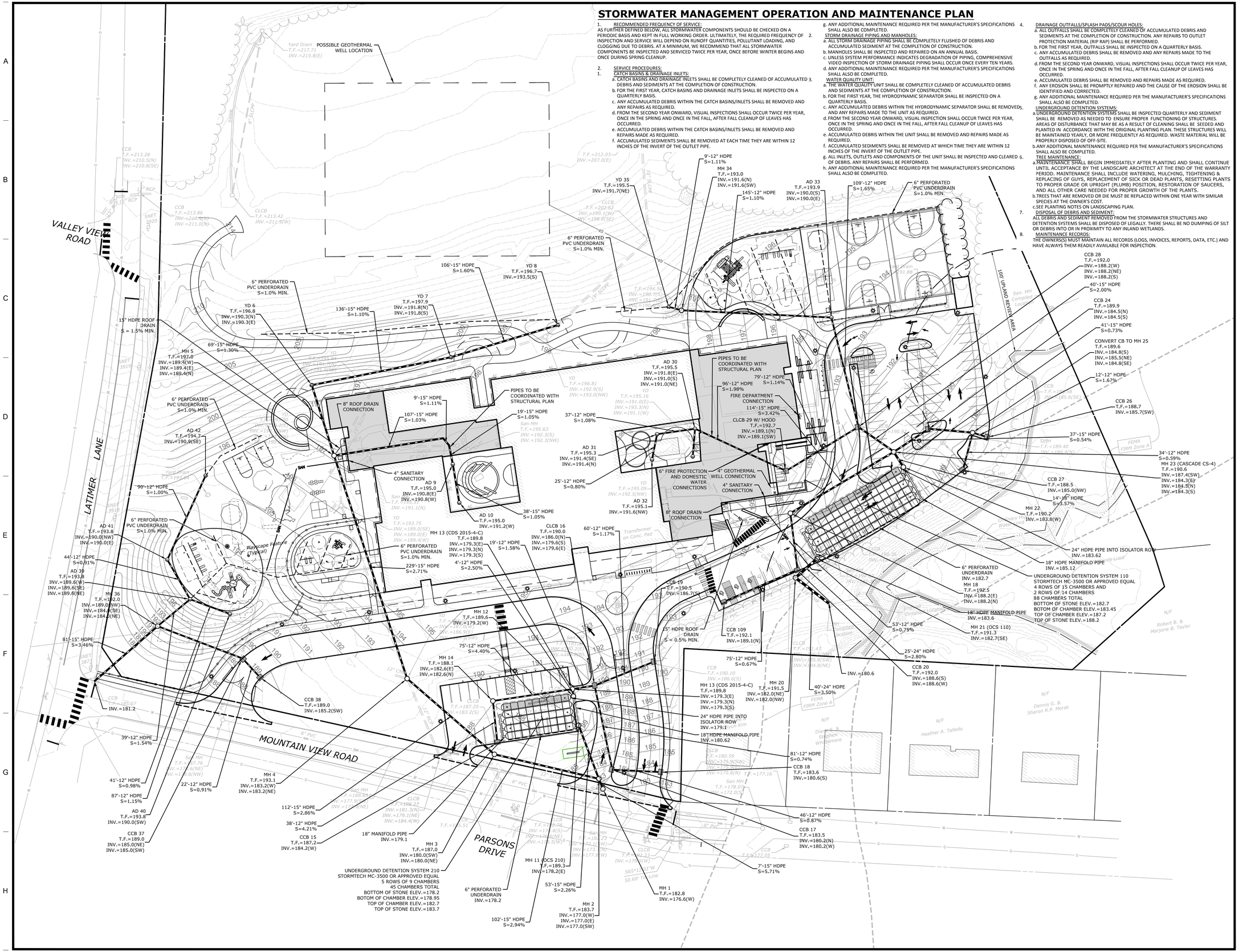

STORMWATER MANAGEMENT OPERATION AND MAINTENANCE PLAN

1. RECOMMENDED FREQUENCY OF SERVICE:
AS FURTHER DEFINED BELOW, ALL STORMWATER COMPONENTS SHOULD BE CHECKED ON A PERIODIC BASIS AND KEPT IN FULL WORKING ORDER. ULTIMATELY, THE REQUIRED FREQUENCY OF INSPECTION AND SERVICE WILL DEPEND ON RUNOFF QUANTITIES, POLLUTANT LOADING, AND CLOGGING DUE TO DEBRIS. AT A MINIMUM, WE RECOMMEND THAT ALL STORMWATER COMPONENTS BE INSPECTED AND SERVICED TWICE PER YEAR, ONCE BEFORE WINTER BEGINS AND ONCE DURING SPRING CLEANUP.

2. SERVICE PROCEDURES:
1. CATCH BASINS & DRAINAGE INLETS:
a. CATCH BASINS AND DRAINAGE INLETS SHALL BE COMPLETELY CLEANED OF ACCUMULATED DEBRIS AND SEDIMENTS AT THE COMPLETION OF CONSTRUCTION.
b. FOR THE FIRST YEAR, CATCH BASINS AND DRAINAGE INLETS SHALL BE INSPECTED ON A QUARTERLY BASIS.
c. ANY ACCUMULATED DEBRIS WITHIN THE CATCH BASINS/INLETS SHALL BE REMOVED AND ANY REPAIRS AS REQUIRED.
d. FROM THE SECOND YEAR ONWARD, VISUAL INSPECTIONS SHALL OCCUR TWICE PER YEAR, ONCE IN THE SPRING AND ONCE IN THE FALL, AFTER FALL CLEANUP OF LEAVES HAS OCCURRED.
e. ACCUMULATED DEBRIS WITHIN THE CATCH BASINS/INLETS SHALL BE REMOVED AND REPAIRS MADE AS REQUIRED.
f. ACCUMULATED SEDIMENTS SHALL BE REMOVED AT EACH TIME THEY ARE WITHIN 12 INCHES OF THE INVERT OF THE OUTLET PIPE.
g. ANY ADDITIONAL MAINTENANCE REQUIRED PER THE MANUFACTURER'S SPECIFICATIONS SHALL ALSO BE COMPLETED.

2. STORM DRAINAGE PIPING AND MANHOLES:
a. ALL STORM DRAINAGE PIPING SHALL BE COMPLETELY FLUSHED OF DEBRIS AND ACCUMULATED SEDIMENT AT THE COMPLETION OF CONSTRUCTION.
b. MANHOLES SHALL BE INSPECTED AND REPAIRED ON AN ANNUAL BASIS.
c. UNLESS SYSTEM PERFORMANCE INDICATES DEGRADATION OF PIPING, COMPREHENSIVE VIDEO INSPECTION OF STORM DRAINAGE PIPING SHALL OCCUR ONCE EVERY TEN YEARS.
d. ANY ADDITIONAL MAINTENANCE REQUIRED PER THE MANUFACTURER'S SPECIFICATIONS SHALL ALSO BE COMPLETED.

3. WATER QUALITY UNIT:
a. THE WATER QUALITY UNIT SHALL BE COMPLETELY CLEANED OF ACCUMULATED DEBRIS AND SEDIMENTS AT THE COMPLETION OF CONSTRUCTION.
b. FOR THE FIRST YEAR, THE HYDRODYNAMIC SEPARATOR SHALL BE INSPECTED ON A QUARTERLY BASIS.
c. ANY ACCUMULATED DEBRIS WITHIN THE HYDRODYNAMIC SEPARATOR SHALL BE REMOVED, AND ANY REPAIRS MADE TO THE UNIT AS REQUIRED.
d. FROM THE SECOND YEAR ONWARD, VISUAL INSPECTION SHALL OCCUR TWICE PER YEAR, ONCE IN THE SPRING AND ONCE IN THE FALL, AFTER FALL CLEANUP OF LEAVES HAS OCCURRED.
e. ACCUMULATED DEBRIS WITHIN THE UNIT SHALL BE REMOVED AND REPAIRS MADE AS REQUIRED.
f. ACCUMULATED SEDIMENTS SHALL BE REMOVED AT WHICH TIME THEY ARE WITHIN 12 INCHES OF THE INVERT OF THE OUTLET PIPE.
g. ALL INLETS, OUTLETS AND COMPONENTS OF THE UNIT SHALL BE INSPECTED AND CLEARED OF DEBRIS. ANY REPAIRS SHALL BE PERFORMED.
h. ANY ADDITIONAL MAINTENANCE REQUIRED PER THE MANUFACTURER'S SPECIFICATIONS SHALL ALSO BE COMPLETED.

4. DRAINAGE OUTFALLS/SPLASH PADS/SCOUR HOLES:
a. ALL OUTFALLS SHALL BE COMPLETELY CLEANED OF ACCUMULATED DEBRIS AND SEDIMENTS AT THE COMPLETION OF CONSTRUCTION. ANY REPAIRS TO OUTLET PROTECTION MATERIAL (RIP RAP) SHALL BE PERFORMED.
b. FOR THE FIRST YEAR, OUTFALLS SHALL BE INSPECTED ON A QUARTERLY BASIS.
c. ANY ACCUMULATED DEBRIS SHALL BE REMOVED AND ANY REPAIRS MADE TO THE OUTFALLS AS REQUIRED.
d. FROM THE SECOND YEAR ONWARD, VISUAL INSPECTIONS SHALL OCCUR TWICE PER YEAR, ONCE IN THE SPRING AND ONCE IN THE FALL, AFTER FALL CLEANUP OF LEAVES HAS OCCURRED.
e. ACCUMULATED DEBRIS SHALL BE REMOVED AND REPAIRS MADE AS REQUIRED.
f. ANY EROSION SHALL BE PROMPTLY REPAIRED AND THE CAUSE OF THE EROSION SHALL BE IDENTIFIED AND CORRECTED.
g. ANY ADDITIONAL MAINTENANCE REQUIRED PER THE MANUFACTURER'S SPECIFICATIONS SHALL ALSO BE COMPLETED.

5. UNDERGROUND DETENTION SYSTEMS:
a. UNDERGROUND DETENTION SYSTEMS SHALL BE INSPECTED QUARTERLY AND SEDIMENT SHALL BE REMOVED AS NEEDED TO ENSURE PROPER FUNCTIONING OF STRUCTURES. AREAS OF DISTURBANCE THAT MAY BE AS A RESULT OF CLEANING SHALL BE SEEDED AND PLANTED IN ACCORDANCE WITH THE ORIGINAL PLANTING PLAN. THESE STRUCTURES WILL BE MAINTAINED YEARLY, OR MORE FREQUENTLY AS REQUIRED. WASTE MATERIAL WILL BE PROPERLY DISPOSED OF OFF-SITE.
b. ANY ADDITIONAL MAINTENANCE REQUIRED PER THE MANUFACTURER'S SPECIFICATIONS SHALL ALSO BE COMPLETED.

6. TREE MAINTENANCE:
a. MAINTENANCE SHALL BEGIN IMMEDIATELY AFTER PLANTING AND SHALL CONTINUE UNTIL ACCEPTANCE BY THE LANDSCAPE ARCHITECT AT THE END OF THE WARRANTY PERIOD. MAINTENANCE SHALL INCLUDE WATERING, MULCHING, TIGHTENING & REPLACING OF GUYS, REPLACEMENT OF SICK OR DEAD PLANTS, RESETTING PLANTS TO PROPER GRADE OR UPRIGHT (PLUMB) POSITION, RESTORATION OF SAUCERS, AND ALL OTHER CARE NEEDED FOR PROPER GROWTH OF THE PLANTS.
b. TREES THAT ARE REMOVED OR DIE MUST BE REPLACED WITHIN ONE YEAR WITH SIMILAR SPECIES AT THE OWNER'S COST.
c. SEE PLANTING NOTES ON LANDSCAPING PLAN.

7. DISPOSAL OF DEBRIS AND SEDIMENT:
ALL DEBRIS AND SEDIMENT REMOVED FROM THE STORMWATER STRUCTURES AND DETENTION SYSTEMS SHALL BE DISPOSED OF LEGALLY. THERE SHALL BE NO DUMPING OF SILT OR DEBRIS INTO OR IN PROXIMITY TO ANY INLAND WETLANDS.

8. MAINTENANCE RECORDS:
THE OWNER(S) MUST MAINTAIN ALL RECORDS (LOGS, INVOICES, REPORTS, DATA, ETC.) AND HAVE ALWAYS THEM READILY AVAILABLE FOR INSPECTION.

Tecton ARCHITECTS

SLR
99 REALTY DRIVE
CHESHIRE, CT 06410
203.271.1773
SLRCONSULTING.COM

Client/ Contractor
TOWN OF SIMSBURY

933 HOPMEADOW STREET
SIMSBURY, CT 06070

Project
LATIMER LANE SCHOOL RENOVATION
33 MOUNTAIN VIEW DRIVE
WEATOGUE, CT 06089

0' 20' 40'
0 1/2" 1"
PROJECT NORTH

Seals
INLAND WETLANDS SUBMISSION

STATE OF CONNECTICUT
THOMAS J. DAY
41979
LICENSED
PROFESSIONAL ENGINEER

Issues / Revisions

No.	Date	Description
	01/13/2022	Inland Wetlands Submission

Drawing Title
Site Plan - Utilities

Designed by:	AWG	Project No: 128-0111 RNV
Drawn by:	RH	Scale: 1"=40'
Checked by:	TD	

Drawing Number
C-100

SOIL EROSION AND SEDIMENT CONTROL NARRATIVE

SEDIMENT AND EROSION CONTROL MEASURES AS DEPICTED ON THESE PLANS AND DESCRIBED WITHIN THE SEDIMENT AND EROSION CONTROL NARRATIVE SHALL BE IMPLEMENTED AND MAINTAINED UNTIL PERMANENT COVER AND STABILIZATION IS ESTABLISHED. ALL SEDIMENT AND EROSION CONTROL MEASURES SHALL CONFORM TO THE "GUIDELINES FOR SOIL EROSION AND SEDIMENT CONTROL, CONNECTICUT - 2002, TOWN OF SIMSBURY STANDARDS, AND IN ALL CASES BEST MANAGEMENT PRACTICES SHALL PREVAIL.

1.PURPOSE AND DESCRIPTION OF PROJECT
A.) RENOVATION OF A SCHOOL.
B.) DISTURBED AREA: ± 8.0 ACRES

2.IDENTIFICATION OF EROSION AND SEDIMENT CONTROL CONCERNS
A.) CUTS AND FILLS ASSOCIATED WITH CONSTRUCTION.
B.) PROTECTION OF ONSITE WETLANDS.

3.IDENTIFICATION OF OTHER POSSIBLE PERMITS
THE PERMITS REQUIRED FOR THE PROJECT ARE LOCAL INLAND WETLANDS, AND PLANNING AND ZONING PERMITS.

4.RESPONSIBLE PARTY
TBD

EROSION CONTROL NOTES
CONTRACTOR RESPONSIBILITIES

1. SEDIMENT AND EROSION CONTROLS SHALL BE INSPECTED AT LEAST ONCE A WEEK AND WITHIN 24 HOURS OF THE END OF A STORM WITH A RAINFALL AMOUNT OF 0.5 INCH OR GREATER. A LOG OF SUCH INSPECTIONS SHALL BE MAINTAINED AT THE SITE.
2. THE SEDIMENT AND EROSION CONTROL PLAN SHALL BE MODIFIED BY THE CONTRACTOR AT THE DIRECTION OF THE ENGINEER AND THE TOWN'S DESIGNATED REPRESENTATIVE AS NECESSITATED BY CHANGING SITE CONDITIONS
3. INSPECTION OF THE SITE FOR EROSION SHALL CONTINUE FOR A PERIOD OF THREE MONTHS AFTER COMPLETION WHEN RAINFALLS OF ONE INCH OR MORE OCCUR.
4. ALL DEWATERING WASTE WATERS SHALL BE DISCHARGED IN A MANNER WHICH MINIMIZES THE DISCOLORATION OF THE RECEIVING WATERS.
5. THE SITE SHOULD BE KEPT CLEAN OF LOOSE DEBRIS, LITTER, AND BUILDING MATERIALS SUCH THAT NONE OF THE ABOVE ENTER WATERS OR WETLANDS.
6. A COPY OF ALL PLANS AND REVISIONS, AND THE SEDIMENT AND EROSION CONTROL PLAN SHALL BE MAINTAINED ON-SITE AT ALL TIMES DURING CONSTRUCTION.
7. ALL CATCH BASIN SUMPS SHOULD BE INSPECTED AFTER CONSTRUCTION COMPLETION AND SEDIMENT REMOVED. THE SEDIMENT SHALL BE DISPOSED OF IN AN APPROVED LOCATION.

EROSION CONTROL LEGEND

CE	CONSTRUCTION ENTRANCE
IP	INLET PROTECTION (TYP. OF ALL INLETS)
GSF	SEDIMENT FILTER FENCE
SW	STRAW WATTLES
STK	TEMPORARY SOIL STOCKPILE AREA SURROUNDED WITH SEDIMENT FILTER FENCE
ECB	EROSION CONTROL BLANKET OR EQUAL (AS REQUIRED)
DB	DIVERSION BERM WITH CHECK DAM
TST	TEMPORARY SEDIMENT TRAP

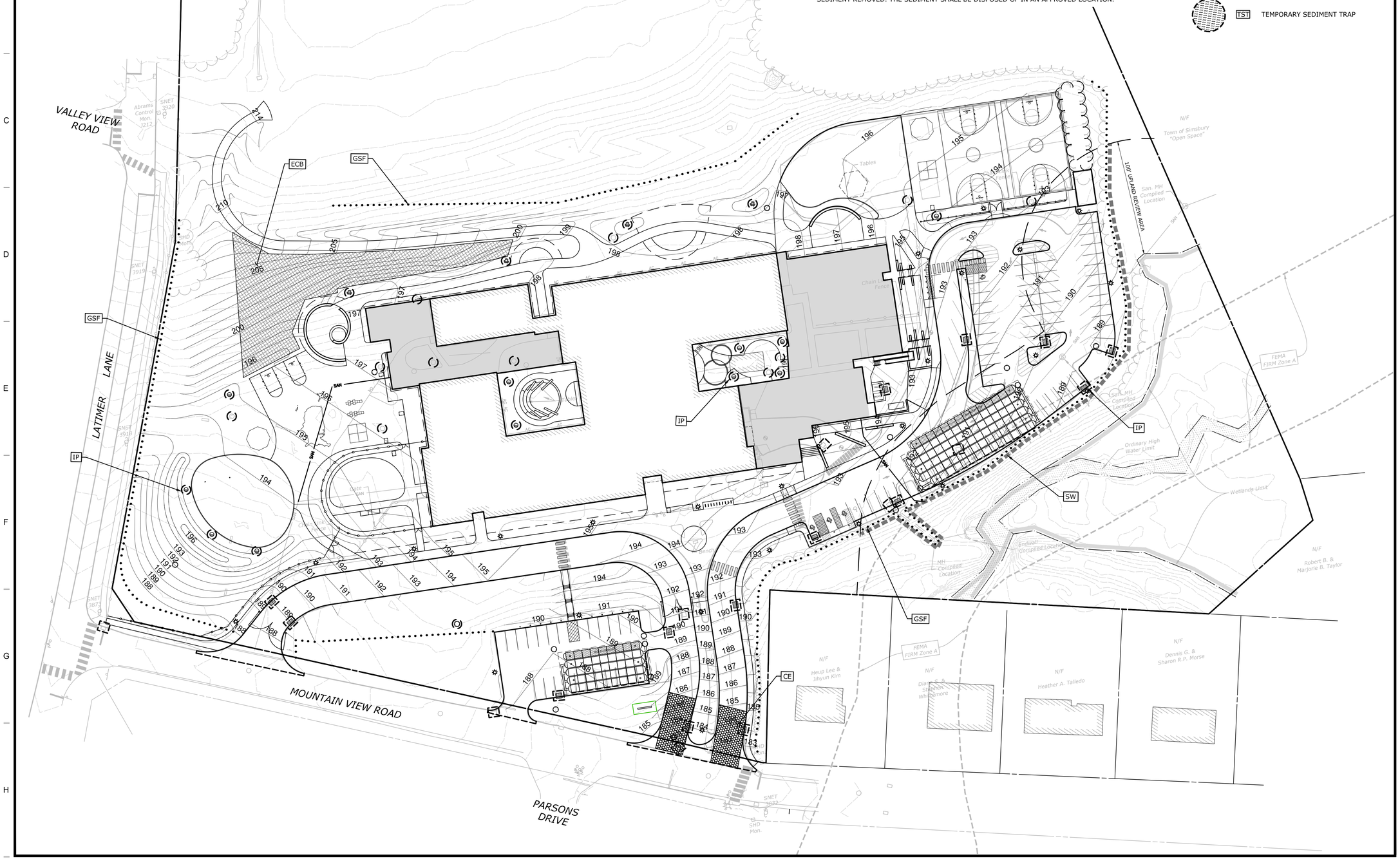

Tecton ARCHITECTS

SLR
99 REALTY DRIVE
CHESHIRE, CT 06410
203.271.1773
SLRCONSULTING.COM

Client/ Contractor
TOWN OF SIMSBURY

933 HOPMEADOW STREET
SIMSBURY, CT 06070

Project
LATIMER LANE SCHOOL RENOVATION
33 MOUNTAIN VIEW DRIVE
WEATOGUE, CT 06089

0' 20' 40' 0 1/2" 1"
PROJECT NORTH

Seals
INLAND WETLANDS SUBMISSION

STATE OF CONNECTICUT THOMAS J. DALY 419-19 LICENSED PROFESSIONAL ENGINEER

Issues / Revisions

No.	Date	Description
	01/13/2022	Inland Wetlands Submission

Drawing Title
Sediment and Erosion Control Plan

Designed by:	AWG	Project No: 128-0111 RNV
Drawn by:	RH	Scale: 1"=40'
Checked by:	TD	

Drawing Number
C-101

SEDIMENT AND EROSION CONTROL SPECIFICATIONS

GENERAL:

THESE GUIDELINES SHALL APPLY TO ALL WORK CONSISTING OF ANY AND ALL TEMPORARY AND/OR PERMANENT MEASURES TO CONTROL WATER POLLUTION AND SOIL EROSION, AS MAY BE REQUIRED, DURING THE CONSTRUCTION OF THE PROJECT. IN GENERAL, ALL CONSTRUCTION ACTIVITIES SHALL PROCEED IN SUCH A MANNER SO AS NOT TO POLLUTE ANY WETLANDS, WATERCOURSE, WATERBODY, AND CONDUIT CARRYING WATER, ETC. THE CONTRACTOR SHALL LIMIT, INSOFAR AS POSSIBLE, THE SURFACE AREA OF EARTH MATERIALS EXPOSED BY CONSTRUCTION METHODS AND IMMEDIATELY PROVIDE PERMANENT AND TEMPORARY POLLUTION CONTROL MEASURES TO PREVENT CONTAMINATION OF ADJACENT WETLANDS, WATERCOURSES, AND WATERBODIES, AND TO PREVENT, INSOFAR AS POSSIBLE, EROSION ON THE SITE.

LAND GRADING

GENERAL:

1. THE RESHAPING OF THE GROUND SURFACE BY EXCAVATION AND FILLING OR A COMBINATION OF BOTH, TO OBTAIN PLANNED GRADES, SHALL PROCEED IN ACCORDANCE WITH THE FOLLOWING CRITERIA:
   a. THE CUT FACE OF EARTH EXCAVATION SHALL NOT BE STEEPER THAN TWO HORIZONTAL TO ONE VERTICAL (2:1).
   b. THE PERMANENT EXPOSED FACES OF FILLS SHALL NOT BE STEEPER THAN TWO HORIZONTAL TO ONE VERTICAL (2:1).
   c. THE CUT FACE OF ROCK EXCAVATION SHALL NOT BE STEEPER THAN ONE HORIZONTAL TO FOUR VERTICAL (1:4).
   d. PROVISION SHOULD BE MADE TO CONDUCT SURFACE WATER SAFELY TO STORM DRAINS TO PREVENT SURFACE RUNOFF FROM DAMAGING CUT FACES AND FILL SLOPES.
   e. EXCAVATIONS SHOULD NOT BE MADE SO CLOSE TO PROPERTY LINES AS TO ENDANGER ADJOINING PROPERTY WITHOUT PROTECTING SUCH PROPERTY FROM EROSION, SLIDING, SETTLING, OR CRACKING.
   f. NO FILL SHOULD BE PLACED WHERE IT WILL SLIDE OR WASH UPON THE PREMISES OF ANOTHER OWNER OR UPON ADJACENT WETLANDS, WATERCOURSES, OR WATERBODIES.
   g. PRIOR TO ANY REGRADING, A STABILIZED CONSTRUCTION ENTRANCE SHALL BE PLACED AT THE ENTRANCE TO THE WORK AREA IN ORDER TO REDUCE MUD AND OTHER SEDIMENTS FROM LEAVING THE SITE.

TOPSOILING

GENERAL:

1. TOPSOIL SHALL BE SPREAD OVER ALL EXPOSED AREAS IN ORDER TO PROVIDE A SOIL MEDIUM HAVING FAVORABLE CHARACTERISTICS FOR THE ESTABLISHMENT, GROWTH, AND MAINTENANCE OF VEGETATION.
2. UPON ATTAINING FINAL SUBGRADES, SCARIFY SURFACE TO PROVIDE A GOOD BOND WITH TOPSOIL.
3. REMOVE ALL LARGE STONES, TREE LIMBS, ROOTS AND CONSTRUCTION DEBRIS.
4. APPLY SOIL AMENDMENTS AS FOLLOWS:
   LIME: ACCORDING TO SOIL TEST OR AT THE RATE OF 2 TONS PER ACRE.

   ROCK DUST: ACCORDING TO SOIL TEST OR AT THE RATE OF 2 TONS PER ACRE

MATERIAL:

1. TOPSOIL SHOULD HAVE PHYSICAL, CHEMICAL, AND BIOLOGICAL CHARACTERISTICS FAVORABLE TO THE GROWTH OF PLANTS.
2. TOPSOIL SHOULD HAVE A SANDY OR LOAMY TEXTURE.
3. TOPSOIL SHOULD BE RELATIVELY FREE OF SUBSOIL MATERIAL AND MUST BE FREE OF LARGE STONES , LUMPS OF SOIL, ROOTS, TREE LIMBS, TRASH, OR CONSTRUCTION DEBRIS. IT SHOULD BE FREE OF ROOTS OR RHIZOMES SUCH AS THISTLE, NUTGRASS, AND QUACKGRASS.
4. AN ORGANIC MATTER CONTENT OF SIX PERCENT (6%) IS REQUIRED. AVOID LIGHT COLORED SUBSOIL MATERIAL.
5. SOLUBLE SALT CONTENT OF LESS THAN 400 PPM IS REQUIRED.
6. THE TOPSOIL SHALL BE WARRANTED BY SELLER TO BE FREE OF DETECTABLE RESIDUES OF CHEMICAL PESTICIDES, HERBICIDES, PETROLEUM PRODUCTS, OR OTHER UNSUITABLE TOXINS.

APPLICATION:

1. AVOID SPREADING WHEN TOPSOIL IS WET OR FROZEN.
2. SPREAD TOPSOIL UNIFORMLY TO A DEPTH OF AT LEAST FOUR INCHES (4"), OR TO THE DEPTH SHOWN ON THE LANDSCAPING PLANS.

TEMPORARY VEGETATIVE COVER

TEMPORARY VEGETATIVE COVER SHALL BE ESTABLISHED ON ALL UNPROTECTED AREAS THAT PRODUCE SEDIMENT, AREAS WHERE FINAL GRADING HAS BEEN COMPLETED, AND AREAS WHERE THE ESTIMATED PERIOD OF BARE SOIL EXPOSURE IS LESS THAN 12 MONTHS. TEMPORARY VEGETATIVE COVER SHALL BE APPLIED IF AREAS WILL NOT BE PERMANENTLY SEEDED BY SEPTEMBER 1.

GENERAL:

1. INSTALL REQUIRED SURFACE WATER CONTROL MEASURES.
2. REMOVE LOOSE ROCK, STONE, AND CONSTRUCTION DEBRIS FROM AREA.
3. APPLY SOIL AMENDMENTS AS FOLLOWS:
   LIME: ACCORDING TO SOIL TEST OR AT THE RATE OF 1 TONS PER ACRE.
   ROCK DUST: ACCORDING TO SOIL TEST OR AT THE RATE OF 1 TONS PER ACRE
4. UNLESS HYDROSEEDED, WORK IN LIME TO A DEPTH OF 4 INCHES WITH A DISK OR ANY SUITABLE EQUIPMENT. DO NOT WORK FINISHED COMPOST INTO THE SOIL - APPLY IT EVENLY TO SOIL SURFACE AS A SEED BED.
5. TILLAGE SHOULD ACHIEVE A REASONABLY UNIFORM LOOSE SEEDBED. WORK ON CONTOUR IF SITE IS SLOPING.

SITE PREPARATION:

1. SELECT APPROPRIATE SPECIES FOR THE SITUATION. NOTE RATES AND SEEDING DATES (SEE VEGETATIVE COVER SELECTION & MULCHING)
2. APPLY SEED UNIFORMLY ACCORDING TO THE RATE INDICATED BY BROADCASTING, DRILLING, OR HYDRAULIC APPLICATION.
3. UNLESS HYDROSEEDED, COVER RYEGRASS SEEDS WITH NOT MORE THAN 1/4 INCH OF SOIL USING SUITABLE EQUIPMENT.
4. MULCH IMMEDIATELY AFTER SEEDING IF REQUIRED. (SEE VEGETATIVE COVER SELECTION & MULCHING SPECIFICATION BELOW.) APPLY STRAW AND ANCHOR TO SLOPES GREATER THAN 3%%% OR WHERE NEEDED.

PERMANENT VEGETATIVE COVER

GENERAL:

PERMANENT VEGETATIVE COVER SHALL BE ESTABLISHED AS VARIOUS SECTIONS OF THE PROJECT ARE COMPLETED IN ORDER TO STABILIZE THE SOIL, REDUCE DOWNSTREAM DAMAGE FROM SEDIMENT AND RUNOFF, AND TO ENHANCE THE AESTHETIC NATURE OF THE SITE. IT WILL BE APPLIED TO ALL CONSTRUCTION AREAS SUBJECT TO EROSION WHERE FINAL GRADING HAS BEEN COMPLETED AND A PERMANENT COVER IS NEEDED.

SITE PREPARATION:

1. INSTALL REQUIRED SURFACE WATER CONTROL MEASURES.
2. REMOVE LOOSE ROCK, STONE, AND CONSTRUCTION DEBRIS FROM AREA.
3. PERFORM ALL PLANTING OPERATIONS PARALLEL TO THE CONTOURS OF THE SLOPE.
4. APPLY TOPSOIL AS INDICATED ELSEWHERE HEREIN.
5. APPLY SOIL AMENDMENTS AS FOLLOWS:
   LIME: ACCORDING TO SOIL TEST OR AT THE RATE OF 1 TONS PER ACRE.
   ROCK DUST: ACCORDING TO SOIL TEST OR AT THE RATE OF 1 TONS PER ACRE
6. UNLESS HYDROSEEDED, WORK IN LIME TO A DEPTH OF 4 INCHES WITH A DISK OR ANY SUITABLE EQUIPMENT. DO NOT WORK FINISHED COMPOST

VEGETATED COVER SELECTION AND MULCHING

TEMPORARY VEGETATIVE COVER:

PERENNIAL RYEGRASS 5 LBS./1,000 SQ.FT. (LOLIUM PERENNE)
DUTCH WHITE CLOVER (TRIFOLIUM REPENS) 1/4 LBS PER 1000 SF. OR 6LBS/AC.

* PERMANENT VEGETATIVE COVER:

DUTCH WHITE CLOVER 30%
BARON KENTUCKY BLUEGRASS 30%
JAMESTOWN II CHEWINGS FESCUE 20%
PALMER PERENNIAL RYEGRASS 20%

NEW ENGLAND EROSION CONTROL/R3ESOTRATION MIX FOR MO1ST SITES AT 1/8 LB PER 1000 S.F. FOR 5 LBS/AC.

NEW ENGLAND SHOWY WILD FLOW MIX AT 1/16 LB PER 1000 S.F. OR 2 LBS/AC

* LOFTS - "TRIPLEX GENERAL" MIX OR APPROVED EQUAL. RECOMMENDED RATE/TIME SEEDING.
SPRING SEEDING: 4/1 to 5/31
FALL SEEDING: 8/16 to 10/15

TEMPORARY MULCHING:

STRAY 70-90 LBS./1,000 SQ.FT. (TEMPORARY VEGETATIVE AREAS) WOOD FIBER IN HYDROMULCH SLURRY 25-50 LBS./1,000 SQ. FT.

ESTABLISHMENT:
1. SMOOTH AND FIRM SEEDBED WITH CULTIPACKER OR OTHER SIMILAR EQUIPMENT PRIOR TO SEEDING (EXCEPT WHEN HYDROSEEDING).
2. SELECT ADAPTED SEED MIXTURE FOR THE SPECIFIC SITUATION. NOTE RATES AND THE SEEDING DATES (SEE VEGETATIVE COVER SELECTION & MULCHING SPEC. BELOW).
3. APPLY SEED UNIFORMLY ACCORDING TO RATE INDICATED, BY BROADCASTING, DRILLING, OR HYDRAULIC APPLICATION.
4. COVER GRASS AND LEGUME SEED WITH NOT MORE THAN 1/4 INCH OF SOIL WITH SUITABLE EQUIPMENT (EXCEPT WHEN HYDROSEEDING).
5. MULCH IMMEDIATELY AFTER SEEDING, IF REQUIRED, ACCORDING TO TEMPORARY MULCHING SPECIFICATIONS. (SEE VEGETATIVE COVER SELECTION & MULCHING SPECIFICATION BELOW).
6. USE PROPER INOCULAT ON ALL LEGUME SEEDLINGS, USE FOUR (4) TIMES NORMAL RATES WHEN HYDROSEEDING.
7. USE SOD WHERE THERE IS A HEAVY CONCENTRATION OF WATER AND IN CRITICAL AREAS WHERE IT IS IMPORTANT TO GET A QUICK VEGETATIVE COVER TO PREVENT EROSION.

MAINTENANCE:

1. TEST FOR SOIL ACIDITY EVERY THREE (3) YEARS AND LIME AS REQUIRED.

EROSION CHECKS

GENERAL:

1. TEMPORARY PERVIOUS BARRIERS USING BALES OF HAY OR STRAW, HELD IN PLACE WITH STAKES DRIVEN THROUGH THE BALES AND INTO THE GROUND OR GEOTEXTILE FABRIC FASTENED TO A FENCE POST AND BURIED INTO THE GROUND, SHALL BE INSTALLED AND MAINTAINED AS REQUIRED TO CHECK EROSION AND REDUCE SEDIMENTATION.

CONSTRUCTION:

1. BALES SHOULD BE PLACED IN A ROW WITH ENDS TIGHTLY ABUTTING THE ADJACENT BALES.
2. EACH BALE SHALL BE EMBEDDED INTO THE SOIL A MINIMUM OF FOUR (4") INCHES.
3. BALES SHALL BE SECURELY ANCHORED IN PLACE BY WOOD STAKES OR REINFORCEMENT BARS DRIVEN THROUGH THE BALES AND INTO THE GROUND. THE FIRST STAKE IN EACH BALE SHALL BE ANGLED TOWARD THE PREVIOUSLY LAID BALE TO FORCE BALES TOGETHER.
4. GEOTEXTILE FABRIC SHALL BE SECURELY ANCHORED AT THE TOP OF A THREE FOOT (3') HIGH FENCE AND BURIED A MINIMUM OF FOUR INCHES (4") TO THE SOIL. SEAMS BETWEEN SECTIONS OF FILTER FABRIC SHALL OVERLAP A MINIMUM OF TWO FEET (2').

INSTALLATION AND MAINTENANCE:

1. BALED HAY EROSION BARRIERS SHALL BE INSTALLED AT ALL STORM SEWER INLETS.
2. BALED HAY EROSION BARRIERS AND GEOTEXTILE FENCE SHALL BE INSTALLED AT THE LOCATION INDICATED ON THE PLAN AND IN ADDITIONAL AREAS AS MAY BE DEEMED APPROPRIATE DURING CONSTRUCTION.
3. ALL EROSION CHECKS SHALL BE MAINTAINED UNTIL ADJACENT AREAS ARE STABILIZED.
4. INSPECTION SHALL BE FREQUENT (AT MINIMUM MONTHLY AND BEFORE AND AFTER HEAVY RAIN) AND REPAIR OR REPLACEMENT SHALL BE MADE PROMPTLY AS NEEDED.
5. EROSION CHECKS SHALL BE REMOVED WHEN THEY HAVE SERVED THEIR USEFULNESS SO AS NOT TO BLOCK OR IMPEDE STORMWATER FLOW OR DRAINAGE.

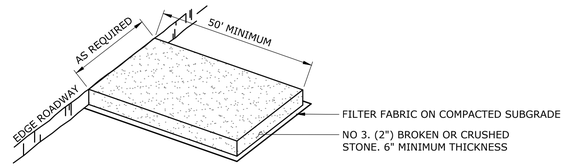

NOTES:

1. CONSTRUCTION ENTRANCE PAD SHALL BE INSTALLED AND MAINTAINED DURING OPERATIONS WHICH GENERATE VEHICULAR TRACKING OF MUD.

CONSTRUCTION ENTRANCE PAD

NOT TO SCALE

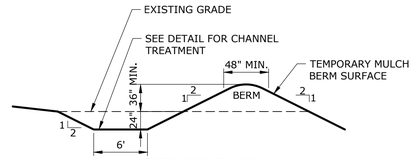

TEMPORARY DIVERSION BERM AND SWALE

NOT TO SCALE

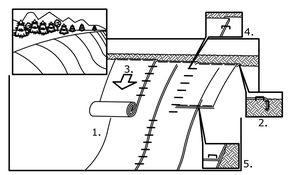

NOTES:

1. PREPARE SOIL BEFORE INSTALLING BLANKETS, INCLUDING APPLICATION OF LIME, FERTILIZER, AND SEED. NOTE: WHEN USING SCC225, DO NOT SEED PREPARED AREA. SCC225 MUST BE INSTALLED WITH PAPER SIDE DOWN.
2. BEGIN AT THE TOP OF THE SLOPE BY ANCHORING THE BLANKET IN A 6" DEEP BY 6" WIDE TRENCH. BACKFILL AND COMPACT THE TRENCH AFTER STAPLING.
3. ROLL THE BLANKETS DOWN THE SLOPE IN THE DIRECTION OF THE WATER FLOW.
4. THE EDGES OF PARALLEL BLANKETS MUST BE STAPLED WITH APPROXIMATELY 2" OVERLAP.
5. WHEN BLANKETS MUST BE SPLICED DOWN THE SLOPE, PLACE BLANKETS END OVER END (SHINGLE STYLE) WITH APPROXIMATELY 6" OVERLAP. STAPLE THROUGH OVERLAP AREA, APPROXIMATELY 12" APART.

REFER TO GENERAL STAPLE PATTERN GUIDE IN NORTH AMERICAN GREEN CATALOG FOR CORRECT STAPLE PATTERN RECOMMENDATIONS FOR SLOPE INSTALLATIONS.

APPLICATION OF EROSION CONTROL BLANKET ON SLOPES

NOT TO SCALE

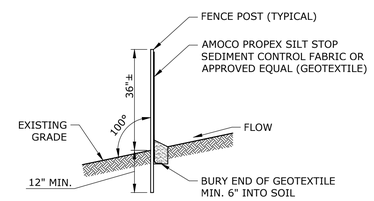

SEDIMENT FILTER FENCE

NOT TO SCALE

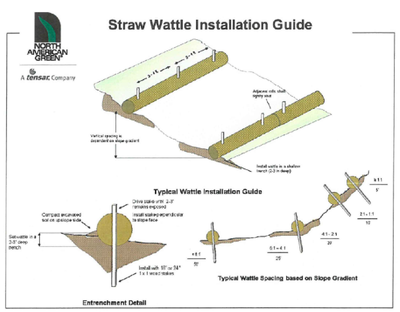

1. BEGIN AT THE LOCATION WHERE THE WATTLE IS TO BE INSTALLED BY EXCAVATING A 2-0" (5-7.5 CM) DEEP X 9" (22.9 CM) WIDE TRENCH ALONG THE CONTOUR OF THE SLOPE. EXCAVATED SOIL SHOULD BE PLACED UP-SLOPE FROM THE ANCHOR TRENCH.
2. PLACE THE WATTLE IN THE TRENCH SO THAT IT CONTOURS TO THE SOIL SURFACE. COMPACT SOIL FROM THE EXCAVATED TRENCH AGAINST THE WATTLE ON THE UPHILL SIDE. ADJACENT WATTLES SHOULD TIGHTLY ABUT.
3. SECURE THE WATTLE WITH 18-24" (45.7-61 CM) STAKES EVERY 3-4' (0.9 - 1.2 M) AND WITH A STAKE ON EACH END. STAKES SHOULD BE DRIVEN THROUGH THE MIDDLE OF THE WATTLE, LEAVING AT LEAST 2-0" (5-7.5 CM) OF STAKE EXTENDING ABOVE THE WATTLE. STAKES SHOULD BE DRIVEN PERPENDICULAR TO SLOPE FACE.

North American Green Straw Wattles are a Best Management Practice (BMP) that offers an effective and economical alternative to silt fence and straw bales for sediment control and storm water runoff.

Guidelines are provided to assist in design, installation, and structure spacing. The guidelines may require modification due to variation in soil type, rainfall intensity or duration, and amount of runoff affecting the application site.

To maximize sediment containment with the Straw Wattle, place the initial structure at the toe/crest of the slope if significant runoff is expected from above. If no runoff from above is expected, the initial Straw Wattle can be installed at the appropriate distance downhill from the toe/crest of the slope. The final structure should be installed at or just beyond the toe/bottom of the slope. Wattles should be installed perpendicular to the primary direction of overland flow.

Straw Wattles are a temporary sediment control device and are not intended to replace rolled erosion control products (RECPs) or hydraulic erosion control products (HECPs). If vegetation is desired for permanent erosion control, North American Green recommends that RECPs or HECPs be used to provide effective immediate erosion control until vegetation is established. Straw Wattles may be used in conjunction with blankets, mats, and mulches as supplemental sediment and runoff control for these applications. Like all sediment control devices, the effectiveness of the Straw Wattle is dependent on storage capacity.

For additional installation assistance, please contact North American Green's Technical Services Department at 1-800-772-2040

14649 Highway 41 North, Evansville, Indiana 47725
1-800-772-2040 www.nagreen.com Rev. 1/2008

STRAW WATTLE

NOT TO SCALE

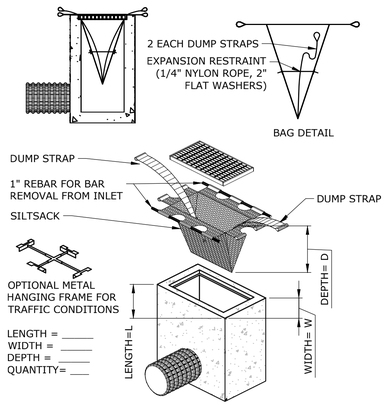

INLET SEDIMENT CONTROL DEVICE

NOT TO SCALE

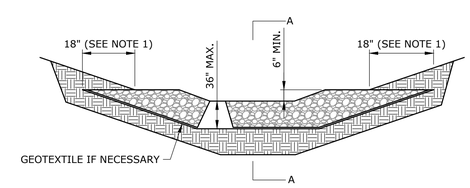

STONE CHECK DAM UPSTREAM

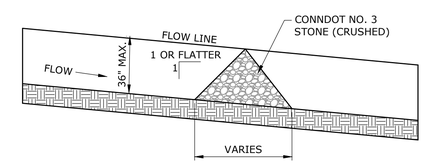

SECTION A-A

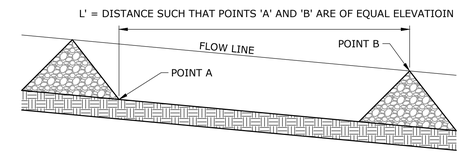

SPACING BETWEEN CHECK DAMS

NOTES:

1. KEY STONE INTO THE DITCH BANKS AND EXTEND INTO THE ABUTMENTS A MINIMUM OF 18" TO PREVENT FLOW FROM FLANKING THE CHECK DAM.
2. THE MINIMUM DESIGN CAPACITY SHALL CONVEY A 2 YEAR-24 HOUR PEAK FLOW.

STONE CHECK DAM

NOT TO SCALE

EROSION CONTROL MAINTENANCE INTERVALS

EROSION CONTROL MEASURE	CONTROL OBJECTIVE	INSPECTION/MAINTENANCE	FAILURE INDICATORS	REMOVAL
SILT FENCE (SF) (RELATED: IP, STK)	- INTERCEPT, AND REDIRECT/DETAIN SMALL AMOUNTS OF SEDIMENT FROM SMALL DISTURBED AREAS. - DECREASE VELOCITY OF SHEET FLOW. - PROTECT SENSITIVE SLOPES OR SOILS FROM EXCESSIVE WATER FLOW.	INSPECT AT LEAST ONCE A WEEK AND WITHIN 24 HOURS OF THE END OF A STORM WITH A RAINFALL OF 0.5 INCHES OR MORE. ACCUMULATED SEDIMENT MUST BE REMOVED ONCE ITS DEPTH IS EQUAL TO ½ THE TRENCH HEIGHT. INSPECT FREQUENTLY DURING PUMPING OPERATIONS IF USED FOR DEWATERING OPERATIONS.	- PHYSICAL DAMAGE OR DECOMPOSITION - EVIDENCE OF OVERTOPPED OR UNDERCUT FENCE - EVIDENCE OF SIGNIFICANT FLOWS EVADING CAPTURE - REPETITIVE FAILURE	SILT FENCE MAY BE REMOVED AFTER UPHILL AND SENSITIVE AREAS HAVE BEEN PERMANENTLY STABILIZED.
CONSTRUCTION ENTRANCE (CE)	- REDUCE THE TRACKING OF SEDIMENT OFF-SITE ONTO PAVED SURFACES.	INSPECT AT THE END OF EACH WORK DAY AND IMMEDIATELY REPAIR DAMAGES. PERIODIC ADDITION OF STONE, OR LENGTHENING OF ENTRANCE MAY BE REQUIRED AS CONDITIONS DEMAND. ALL SEDIMENT SPILLED, DROPPED, WASHED, OR TRACKED ONTO PAVED SURFACES AS A RESULT OF INEFFICIENCY OF CONSTRUCTION ENTRANCE SHALL BE IMMEDIATELY REMOVED.	- SEDIMENT IN ROADWAY ADJACENT TO SITE	CONSTRUCTION ENTRANCE MAY BE PERMANENTLY STABILIZED, AND ALL OTHER SECTIONS OF ROADWAY HAVE BEEN PERMANENTLY PAVED.
INLET PROTECTION (IP)	- PROHIBIT SILT IN CONSTRUCTION-RELATED RUNOFF FROM ENTERING STORM DRAINAGE SYSTEM.	INSPECT AFTER ANY RAIN EVENT. IF FILTER BAG INSIDE CATCH BASIN CONTAINS MORE THAN 6' OF SEDIMENT, REMOVE SEDIMENT FROM BAG. CHECK SURROUNDING SILT FENCE AND HAY BALES PER NOTED ABOVE.	- RIPPED BAG - FAILED HAY BALES / SILT FENCE - SIGNIFICANT SILT PRESENCE IN STORM DRAINAGE SYSTEM OUTFLOW.	INLET PROTECTION MAY BE REMOVED ONCE THE SITE HAS BEEN PERMANENTLY STABILIZED, AND ALL SECTIONS OF ROADWAY HAVE BEEN PERMANENTLY PAVED.
STOCKPILE PROTECTION (STK)	- RETAIN SOIL STOCKPILE IN LOCATIONS SPECIFIED, AND REDUCE WATER-TRANSPORT.	INSPECT SILT FENCE AT THE END OF EACH WORK DAY AND IMMEDIATELY REPAIR DAMAGES. PERIODIC REINFORCEMENT OF SILT FENCE, OR ADDITION OF HAY BALES MAY BE NECESSARY.	- EVIDENCE OF STOCK PILE DIMINISHING DUE TO RAIN EVENTS - FAILURE OF SILT FENCE	STOCKPILE PROTECTION MAY BE REMOVED ONCE THE STOCKPILE IS USED OR REMOVED.
TEMPORARY SEDIMENT TRAP (TST)	- DETAIN SEDIMENT-LADEN RUNOFF FROM SMALL DISTURBED AREAS LONG ENOUGH TO ALLOW A MAJORITY OF THE SEDIMENT TO SETTLE OUT.	INSPECT AT LEAST ONCE A WEEK AND WITHIN 24 HOURS OF THE END OF A STORM WITH A RAINFALL OF 0.5 INCHES OR MORE. STONE OUTLET SHOULD BE AT LEAST 1 FOOT BELOW CREST OF EMBANKMENT. SEDIMENT MUST BE REMOVED WHEN ACCUMULATION REACHES ½ OF THE REQUIRED WET STORAGE.	- TURBID WATER - EXCESSIVE SEDIMENT ACCUMULATION - OVERTOPPING EVIDENCE	TST MAY BE REMOVED ONCE THE CONTRIBUTING DRAINAGE AREA IS PERMANENTLY STABILIZED.
TEMPORARY DIVERSION BERM/SWALE (DB)	- MINIMIZE VELOCITY AND CONCENTRATION OF SHEET FLOW ACROSS CONSTRUCTION SITE TO A SEDIMENT TRAPPING FACILITY. - DIVERT WATER ORIGINATING FROM UNDISTURBED AREA AWAY FROM CONSTRUCTION.	WHEN LOCATED WITHIN CLOSE PROXIMITY TO ONGOING CONSTRUCTION ACTIVITIES, INSPECT AT THE END OF EACH WORK DAY AND IMMEDIATELY REPAIR DAMAGES. OTHERWISE INSPECT AT LEAST ONCE A WEEK AND WITHIN 24 HOURS OF THE END OF A STORM WITH A RAINFALL OF 0.5 INCHES OR MORE. REPAIR THE TEMPORARY MEASURE AND ANY OTHER ASSOCIATED MEASURES WITHIN 24 HOURS.	- PHYSICAL DAMAGE - EXCESSIVE SCOURING/EROSION - REPETITIVE FAILURE	TEMPORARY DIVERSIONS MAY BE REMOVED ONCE CONSTRUCTION HAS CEASED AND THE CONTRIBUTING DRAINAGE AREA HAS BEEN PERMANENTLY STABILIZED.

Tecton ARCHITECTS

SLR
99 REALTY DRIVE
CHESHIRE, CT 06410
203.271.1773
SLRCONSULTING.COM

Client/ Contractor

TOWN OF SIMSBURY

933 HOPMEADOW STREET
SIMSBURY, CT 06070

Project

LATIMER LANE SCHOOL RENOVATION
33 MOUNTAIN VIEW DRIVE
WEATOGUE, CT 06089

PROJECT NORTH

Seals

INLAND WETLANDS SUBMISSION

STATE OF CONNECTICUT · THOMAS J. DAY · 419729 · LICENSED PROFESSIONAL ENGINEER

Issues / Revisions

No.	Date	Description
	01/13/2022	Inland Wetlands Submission

Drawing Title

Sediment and Erosion Control Details and Specifications

Designed by:	AWG	Project No:	128-0111 RNV
Drawn by:	RH	Scale:	As Noted
Checked by:	TD		

Drawing Number

C-201

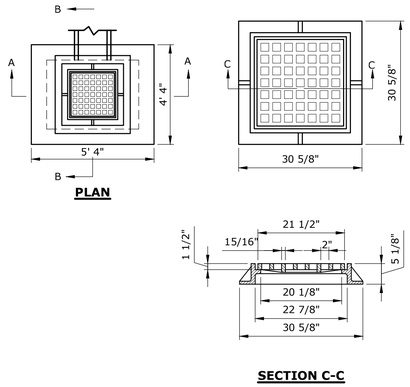

NOTES:

1. YARD DRAIN FRAMES & GRATES SHALL BE PATTERN #R-3404 AS MANUFACTURED BY THE "NEENAH FOUNDRY COMPANY" OF NEENAH, WISCONSIN, OR APPROVED EQUAL.

YARD DRAIN FRAME & GRATE

NOT TO SCALE

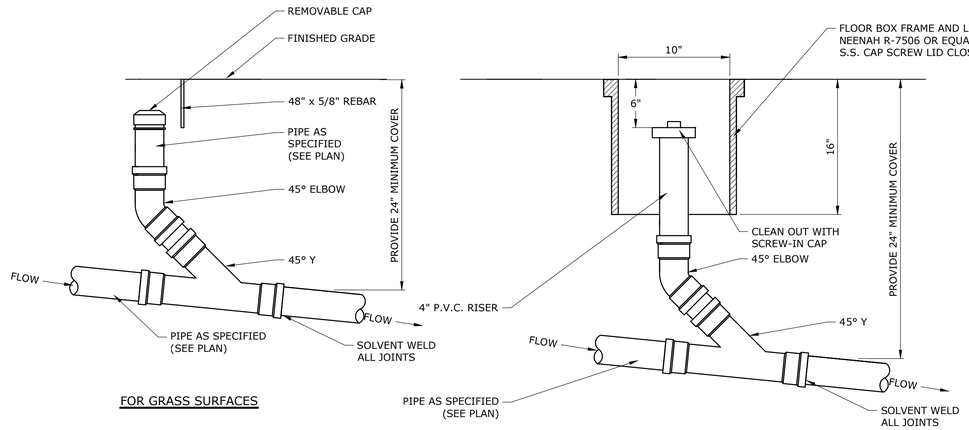

ROOF LEADER CLEAN OUT

NOT TO SCALE

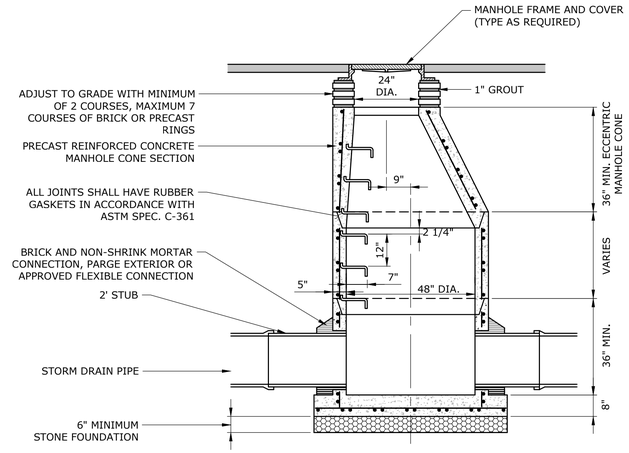

NOTES:

1. 5' OR 6' DIAMETER PRECAST BASES MAY BE REQUIRED DUE TO SIZE OR NUMBER OF PIPES AT THE MANHOLE. PRECAST REDUCERS WILL BE PLACED ABOVE THE 5' OR 6' BASES AS DIRECTED BY THE ENGINEER. WALL THICKNESS TO INCREASE BY 1" FOR EACH 1'-0" OF INSIDE DIAMETER.

PRECAST CONCRETE STORM DRAINAGE MANHOLE

NOT TO SCALE

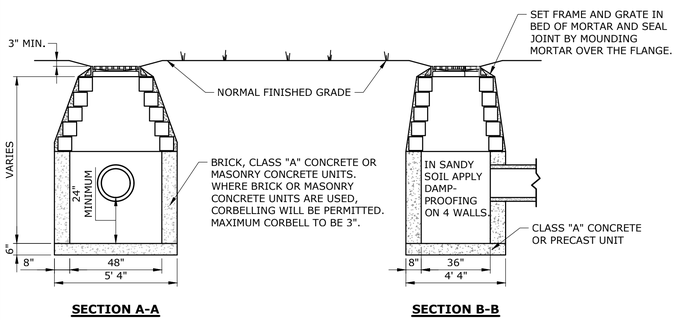

NOTES:

1. WHERE PRECAST CONCRETE UNIT IS USED FOR SUMP, THE TOP OF THE UNIT SHALL BE AT LEAST 6" BELOW THE BOTTOM OF THE PIPE OUTLETTING FROM THE CATCH BASIN.

YARD DRAIN

NOT TO SCALE

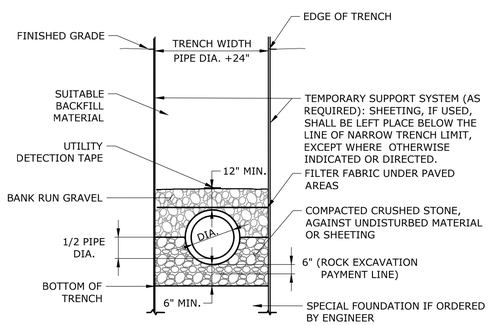

TYPICAL TRENCH SECTION STORM DRAIN AND CULVERTS

NOT TO SCALE

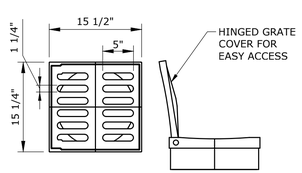

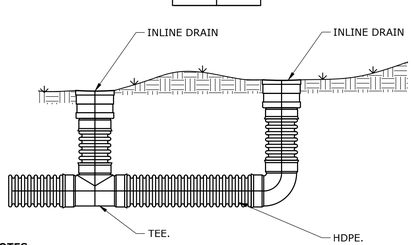

NOTES:

1. ALL AREA DRAIN GRATES SHALL BE AS FOLLOWS UNLESS OTHERWISE NOTED ON PLANS.

   1.1. 15" CAST IRON GRATE DRAIN AREA = 92.5SQ. INCH GRATE HAS H-20 (HEAVY TRAFFIC) DOT RATING .

   1.2. MATERIAL SHALL CONFORM TO ASTM A48 - CLASS 30B.

   1.3. CASTINGS ARE FURNISHED WITH A BLACK PAINT.

   1.4. INLINE DRAIN TO BE NYLOPLAST INC OR APPROVED EQUAL.

AREA DRAIN AND GRATE

NOT TO SCALE

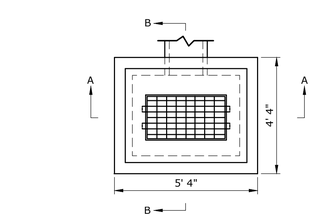

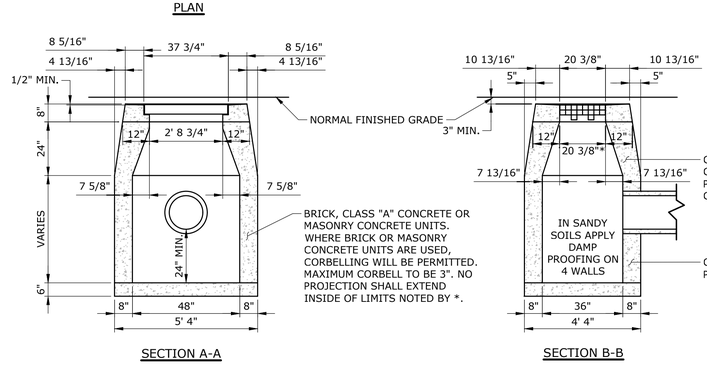

NOTES:

1. WHERE PRECAST CONCRETE UNIT IS USED FOR SUMP, THE TOP OF THE UNIT SHALL BE AT LEAST 6" BELOW THE BOTTOM OF THE PIPE OUTLETTING FROM THE CATCH BASIN.

TYPE "C-L" CATCH BASIN

NOT TO SCALE

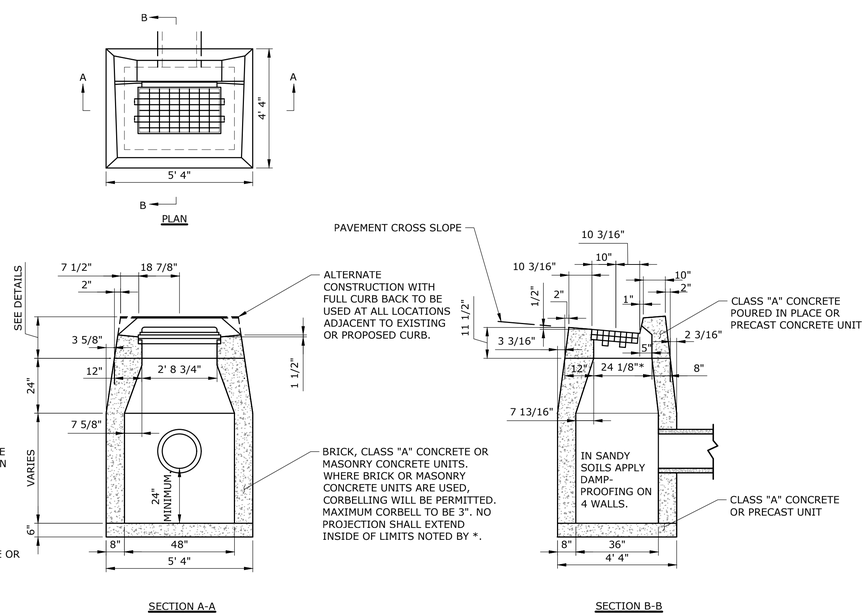

NOTES:

1. WHEN CATCH BASIN IS SET IN CONCRETE PAVEMENT. THE 1/2" SLOPE ON THE TOP SURFACE SHALL BE CHANGED TO MATCH ADJOINING PAVEMENT.
2. WHERE PRECAST CONCRETE UNIT IS USED FOR SUMP, THE TOP OF THE UNIT SHALL BE AT LEAST 6" BELOW THE BOTTOM OF THE PIPE OUTLET FROM THE CATCH BASIN.

TYPE "C" CATCH BASIN

NOT TO SCALE

Tecton ARCHITECTS

SLR
99 REALTY DRIVE
CHESHIRE, CT 06410
203.271.1773
SLRCONSULTING.COM

Client/ Contractor

TOWN OF SIMSBURY

933 HOPMEADOW STREET
SIMSBURY, CT 06070

Project

LATIMER LANE SCHOOL RENOVATION

33 MOUNTAIN VIEW DRIVE
WEATOGUE, CT 06089

PROJECT NORTH

Seals

INLAND WETLANDS SUBMISSION

STATE OF CONNECTICUT · THOMAS J. SALO · 31919 · LICENSED · PROFESSIONAL ENGINEER

Issues / Revisions

No.	Date	Description
	01/13/2022	Inland Wetlands Submission

Drawing Title

Civil Details

Designed by:	AWG	Project No: 128-0111 RNV
Drawn by:	RH	Scale: As Noted
Checked by:	TD	

Drawing Number

C-202

STORMWATER CHAMBER SPECIFICATIONS

1. CHAMBERS SHALL BE STORMTECH MC-3500.
2. CHAMBERS SHALL BE ARCH-SHAPED AND SHALL BE MANUFACTURED FROM VIRGIN, IMPACT-MODIFIED POLYPROPYLENE COPOLYMERS.
3. CHAMBERS SHALL MEET THE REQUIREMENTS OF ASTM F2418-16a, "STANDARD SPECIFICATION FOR POLYPROPYLENE (PP) CORRUGATED WALL STORMWATER COLLECTION CHAMBERS" CHAMBER CLASSIFICATION 45x76 DESIGNATION SS.
4. CHAMBER ROWS SHALL PROVIDE CONTINUOUS, UNOBSTRUCTED INTERNAL SPACE WITH NO INTERNAL SUPPORTS THAT WOULD IMPEDE FLOW OR LIMIT ACCESS FOR INSPECTION.
5. THE STRUCTURAL DESIGN OF THE CHAMBERS, THE STRUCTURAL BACKFILL, AND THE INSTALLATION REQUIREMENTS SHALL ENSURE THAT THE LOAD FACTORS SPECIFIED IN THE AASHTO LRFD BRIDGE DESIGN SPECIFICATIONS, SECTION 12.12, ARE MET FOR: 1) LONG-DURATION DEAD LOADS AND 2) SHORT-DURATION LIVE LOADS, BASED ON THE AASHTO DESIGN TRUCK WITH CONSIDERATION FOR IMPACT AND MULTIPLE VEHICLE PRESENCES.
6. CHAMBERS SHALL BE DESIGNED, TESTED AND ALLOWABLE LOAD CONFIGURATIONS DETERMINED IN ACCORDANCE WITH ASTM F2787, "STANDARD PRACTICE FOR STRUCTURAL DESIGN OF THERMOPLASTIC CORRUGATED WALL STORMWATER COLLECTION CHAMBERS". LOAD CONFIGURATIONS SHALL INCLUDE: 1) INSTANTANEOUS (<1 MIN) AASHTO DESIGN TRUCK LIVE LOAD ON MINIMUM COVER 2) MAXIMUM PERMANENT (75-YR) COVER LOAD AND 3) ALLOWABLE COVER WITH PARKED (1-WEEK) AASHTO DESIGN TRUCK.
7. REQUIREMENTS FOR HANDLING AND INSTALLATION:
   - TO MAINTAIN THE WIDTH OF CHAMBERS DURING SHIPPING AND HANDLING, CHAMBERS SHALL HAVE INTEGRAL, INTERLOCKING STACKING LUGS.
   - TO ENSURE A SECURE JOINT DURING INSTALLATION AND BACKFILL, THE HEIGHT OF THE CHAMBER JOINT SHALL NOT BE LESS THAN 3".
   - TO ENSURE THE INTEGRITY OF THE ARCH SHAPE DURING INSTALLATION, a) THE ARCH STIFFNESS CONSTANT AS DEFINED IN SECTION 6.2.8 OF ASTM F2418 SHALL BE GREATER THAN OR EQUAL TO 500 LBS/IN/IN. AND b) TO RESIST CHAMBER DEFORMATION DURING INSTALLATION AT ELEVATED TEMPERATURES (ABOVE 73° F / 23° C), CHAMBERS SHALL BE PRODUCED FROM REFLECTIVE GOLD OR YELLOW COLORS.
8. ONLY CHAMBERS THAT ARE APPROVED BY THE SITE DESIGN ENGINEER WILL BE ALLOWED. UPON REQUEST BY THE SITE DESIGN ENGINEER OR OWNER, THE CHAMBER MANUFACTURER SHALL SUBMIT A STRUCTURAL EVALUATION FOR APPROVAL BEFORE DELIVERING CHAMBERS TO THE PROJECT SITE AS FOLLOWS:
   - THE STRUCTURAL EVALUATION SHALL BE SEALED BY A REGISTERED PROFESSIONAL ENGINEER.
   - THE STRUCTURAL EVALUATION SHALL DEMONSTRATE THAT THE SAFETY FACTORS ARE GREATER THAN OR EQUAL TO 1.95 FOR DEAD LOAD AND 1.75 FOR LIVE LOAD, THE MINIMUM REQUIRED BY ASTM F2787 AND BY SECTIONS 3 AND 12.12 OF THE AASHTO LRFD BRIDGE DESIGN SPECIFICATIONS FOR THERMOPLASTIC PIPE.
   - THE TEST DERIVED CREEP MODULUS AS SPECIFIED IN ASTM F2418 SHALL BE USED FOR PERMANENT DEAD LOAD DESIGN EXCEPT THAT IT SHALL BE THE 75-YEAR MODULUS USED FOR DESIGN.
9. CHAMBERS AND END CAPS SHALL BE PRODUCED AT AN ISO 9001 CERTIFIED MANUFACTURING FACILITY.

INSPECTION & MAINTENANCE

STEP 1) INSPECT ISOLATOR ROW FOR SEDIMENT
- A. INSPECTION PORTS (IF PRESENT)
  - A.1. REMOVE/OPEN LID ON NYLOPLAST INLINE DRAIN
  - A.2. REMOVE AND CLEAN FLEXSTORM FILTER IF INSTALLED
  - A.3. USING A FLASHLIGHT AND STADIA ROD, MEASURE DEPTH OF SEDIMENT AND RECORD ON MAINTENANCE LOG
  - A.4. LOWER A CAMERA INTO ISOLATOR ROW FOR VISUAL INSPECTION OF SEDIMENT LEVELS (OPTIONAL)
  - A.5. IF SEDIMENT IS AT, OR ABOVE, 3" (80 mm) PROCEED TO STEP 2. IF NOT, PROCEED TO STEP 3.
- B. ALL ISOLATOR ROWS
  - B.1. REMOVE COVER FROM STRUCTURE AT UPSTREAM END OF ISOLATOR ROW
  - B.2. USING A FLASHLIGHT, INSPECT DOWN THE ISOLATOR ROW THROUGH OUTLET PIPE
    - i) MIRRORS ON POLES OR CAMERAS MAY BE USED TO AVOID A CONFINED SPACE ENTRY
    - ii) FOLLOW OSHA REGULATIONS FOR CONFINED SPACE ENTRY IF ENTERING MANHOLE
  - B.3. IF SEDIMENT IS AT, OR ABOVE, 3" (80 mm) PROCEED TO STEP 2. IF NOT, PROCEED TO STEP 3.

STEP 2) CLEAN OUT ISOLATOR ROW USING THE JETVAC PROCESS
- A. A FIXED CULVERT CLEANING NOZZLE WITH REAR FACING SPREAD OF 45" (1.1 m) OR MORE IS PREFERRED
- B. APPLY MULTIPLE PASSES OF JETVAC UNTIL BACKFLUSH WATER IS CLEAN
- C. VACUUM STRUCTURE SUMP AS REQUIRED

STEP 3) REPLACE ALL COVERS, GRATES, FILTERS, AND LIDS; RECORD OBSERVATIONS AND ACTIONS.

STEP 4) INSPECT AND CLEAN BASINS AND MANHOLES UPSTREAM OF THE STORMTECH SYSTEM.

NOTES

1. INSPECT EVERY 6 MONTHS DURING THE FIRST YEAR OF OPERATION. ADJUST THE INSPECTION INTERVAL BASED ON PREVIOUS OBSERVATIONS OF SEDIMENT ACCUMULATION AND HIGH WATER ELEVATIONS.
2. CONDUCT JETTING AND VACTORING ANNUALLY OR WHEN INSPECTION SHOWS THAT MAINTENANCE IS NECESSARY.

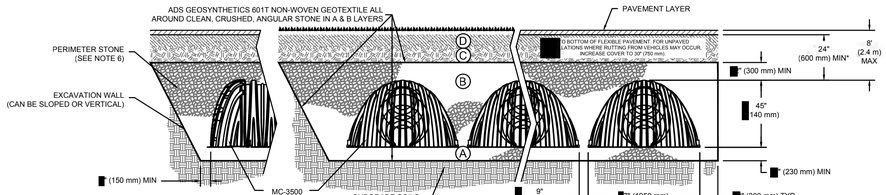

NOTES:

1. MC-3500 CHAMBERS SHALL CONFORM TO THE REQUIREMENTS OF ASTM F2418 "STANDARD SPECIFICATION FOR POLYPROPYLENE (PP) CORRUGATED WALL STORMWATER COLLECTION CHAMBERS".
2. MC-3500 CHAMBERS SHALL BE DESIGNED IN ACCORDANCE WITH ASTM F2787 "STANDARD PRACTICE FOR STRUCTURAL DESIGN OF THERMOPLASTIC CORRUGATED WALL STORMWATER COLLECTION CHAMBERS".
3. "ACCEPTABLE FILL MATERIALS" TABLE ABOVE PROVIDES MATERIAL LOCATIONS, DESCRIPTIONS, GRADATIONS, AND COMPACTION REQUIREMENTS FOR FOUNDATION, EMBEDMENT, AND FILL MATERIALS.
4. THE "SITE DESIGN ENGINEER" REFERS TO THE ENGINEER RESPONSIBLE FOR THE DESIGN AND LAYOUT OF THE STORMTECH CHAMBERS FOR THIS PROJECT.
5. THE SITE DESIGN ENGINEER IS RESPONSIBLE FOR ASSESSING THE BEARING RESISTANCE (ALLOWABLE BEARING CAPACITY) OF THE SUBGRADE SOILS AND THE DEPTH OF FOUNDATION STONE WITH CONSIDERATION FOR THE RANGE OF EXPECTED SOIL MOISTURE CONDITIONS.
6. PERIMETER STONE MUST BE EXTENDED HORIZONTALLY TO THE EXCAVATION WALL FOR BOTH VERTICAL AND SLOPED EXCAVATION WALLS.
7. ONCE LAYER 'C' IS PLACED, ANY SOIL/MATERIAL CAN BE PLACED IN LAYER 'D' UP TO THE FINISHED GRADE. MOST PAVEMENT SUBBASE SOILS CAN BE USED TO REPLACE THE MATERIAL REQUIREMENTS OF LAYER 'C' OR 'D' AT THE SITE DESIGN ENGINEER'S DISCRETION.

ACCEPTABLE FILL MATERIALS: STORMTECH MC-3500 CHAMBER SYSTEMS

	MATERIAL LOCATION	DESCRIPTION	AASHTO MATERIAL CLASSIFICATIONS	COMPACTION / DENSITY REQUIREMENT
D	**FINAL FILL:** FILL MATERIAL FOR LAYER 'D' STARTS FROM THE TOP OF THE 'C' LAYER TO THE BOTTOM OF FLEXIBLE PAVEMENT OR UNPAVED FINISHED GRADE ABOVE. NOTE THAT PAVEMENT SUBBASE MAY BE PART OF THE 'D' LAYER	ANY SOIL/ROCK MATERIALS, NATIVE SOILS, OR PER ENGINEER'S PLANS. CHECK PLANS FOR PAVEMENT SUBGRADE REQUIREMENTS.	N/A	PREPARE PER SITE DESIGN ENGINEER'S PLANS. PAVED INSTALLATIONS MAY HAVE STRINGENT MATERIAL AND PREPARATION REQUIREMENTS.
C	**INITIAL FILL:** FILL MATERIAL FOR LAYER 'C' STARTS FROM THE TOP OF THE EMBEDMENT STONE ('B' LAYER) TO 24" (600 mm) ABOVE THE TOP OF THE CHAMBER. NOTE THAT PAVEMENT SUBBASE MAY BE A PART OF THE 'C' LAYER.	GRANULAR WELL-GRADED SOIL/AGGREGATE MIXTURES, <35% FINES OR PROCESSED AGGREGATE. MOST PAVEMENT SUBBASE MATERIALS CAN BE USED IN LIEU OF THIS LAYER.	AASHTO M145[1] A-1, A-2-4, A-3 OR AASHTO M43[1] 3, 357, 4, 467, 5, 56, 57, 6, 67, 68, 7, 78, 8, 89, 9, 10	BEGIN COMPACTIONS AFTER 24" (600 mm) OF MATERIAL OVER THE CHAMBERS IS REACHED. COMPACT ADDITIONAL LAYERS IN 12" (300 mm) MAX LIFTS TO A MIN. 95% PROCTOR DENSITY FOR WELL GRADED MATERIAL AND 95% RELATIVE DENSITY FOR PROCESSED AGGREGATE MATERIALS.
B	**EMBEDMENT STONE:** FILL SURROUNDING THE CHAMBERS FROM THE FOUNDATION STONE ('A' LAYER) TO THE 'C' LAYER ABOVE.	CLEAN, CRUSHED, ANGULAR STONE, NOMINAL SIZE DISTRIBUTION BETWEEN 3/4-2 INCH (20-50 mm)	AASHTO M43[1] 3, 4	
A	**FOUNDATION STONE:** FILL BELOW CHAMBERS FROM THE SUBGRADE UP TO THE FOOT (BOTTOM) OF THE CHAMBER.	CLEAN, CRUSHED, ANGULAR STONE, NOMINAL SIZE DISTRIBUTION BETWEEN 3/4-2 INCH (20-50 mm)	AASHTO M43[1] 3, 4	PLATE COMPACT OR ROLL TO ACHIEVE A FLAT SURFACE. [2 3]

IMPORTANT - NOTES FOR THE BIDDING AND INSTALLATION OF MC-3500 CHAMBER SYSTEM

1. STORMTECH MC-3500 CHAMBERS SHALL NOT BE INSTALLED UNTIL THE MANUFACTURER'S REPRESENTATIVE HAS COMPLETED A PRE-CONSTRUCTION MEETING WITH THE INSTALLERS.
2. STORMTECH MC-3500 CHAMBERS SHALL BE INSTALLED IN ACCORDANCE WITH THE "STORMTECH MC-3500/MC-4500 CONSTRUCTION GUIDE".
3. CHAMBERS ARE NOT TO BE BACKFILLED WITH A DOZER OR AN EXCAVATOR SITUATED OVER THE CHAMBERS.

   STORMTECH RECOMMENDS 3 BACKFILL METHODS:
   - STONESHOOTER LOCATED OFF THE CHAMBER BED.
   - BACKFILL AS ROWS ARE BUILT USING AN EXCAVATOR ON THE FOUNDATION STONE OR SUBGRADE.
   - BACKFILL FROM OUTSIDE THE EXCAVATION USING A LONG BOOM HOE OR EXCAVATOR.
4. THE FOUNDATION STONE SHALL BE LEVELED AND COMPACTED PRIOR TO PLACING CHAMBERS.
5. JOINTS BETWEEN CHAMBERS SHALL BE PROPERLY SEATED PRIOR TO PLACING STONE.
6. MAINTAIN MINIMUM - 9" (230 mm) SPACING BETWEEN THE CHAMBER ROWS.
7. INLET AND OUTLET MANIFOLDS MUST BE INSERTED A MINIMUM OF 12" (300 mm) INTO CHAMBER END CAPS.
8. EMBEDMENT STONE SURROUNDING CHAMBERS MUST BE A CLEAN, CRUSHED, ANGULAR STONE 3/4-2" (20-50 mm) MEETING THE AASHTO M43 DESIGNATION OF #3 OR #4.
9. STONE MUST BE PLACED ON THE TOP CENTER OF THE CHAMBER TO ANCHOR THE CHAMBERS IN PLACE AND PRESERVE ROW SPACING..
10. ADS RECOMMENDS THE USE OF "FLEXSTORM CATCH IT" INSERTS DURING CONSTRUCTION FOR ALL INLETS TO PROTECT THE SUBSURFACE STORMWATER MANAGEMENT SYSTEM FROM CONSTRUCTION SITE RUNOFF.

NOTES FOR CONSTRUCTION EQUIPMENT

1. STORMTECH MC-3500 CHAMBERS SHALL BE INSTALLED IN ACCORDANCE WITH THE "STORMTECH MC-3500/MC-4500 CONSTRUCTION GUIDE".
2. THE USE OF EQUIPMENT OVER MC-3500 CHAMBERS IS LIMITED:
   - NO EQUIPMENT IS ALLOWED ON BARE CHAMBERS.
   - NO RUBBER TIRED LOADER, DUMP TRUCK, OR EXCAVATORS ARE ALLOWED UNTIL PROPER FILL DEPTHS ARE REACHED IN ACCORDANCE WITH THE "STORMTECH MC-3500/MC-4500 CONSTRUCTION GUIDE".
   - WEIGHT LIMITS FOR CONSRUCTION EQUIPMENT CAN BE FOUND IN THE "STORMTECH MC-3500/MC-4500 CONSTRUCTION GUIDE".
3. FULL 36" (900 mm) OF STABILIZED COVER MATERIALS OVER THE CHAMBERS IS REQUIRED FOR DUMP TRUCK TRAVEL OR DUMPING.

USE OF A DOZER TO PUSH EMBEDMENT STONE BETWEEN THE ROWS OF CHAMBERS MAY CAUSE DAMAGE TO CHAMBERS AND IS NOT AN ACCEPTABLE BACKFILL METHOD. ANY CHAMBERS DAMAGED BY USING THE "DUMP AND PUSH" METHOD ARE NOT COVERED UNDER THE STORMTECH STANDARD WARRANTY.

CONTACT STORMTECH AT 1-888-892-2694 WITH ANY QUESTIONS ON INSTALLATION REQUIREMENTS OR WEIGHT LIMITS FOR CONSTRUCTION EQUIPMENT.

UNDERGROUND DETENTION SYSTEM STORMTECH MC-3500 TYPICAL DETAILS

NOT TO SCALE

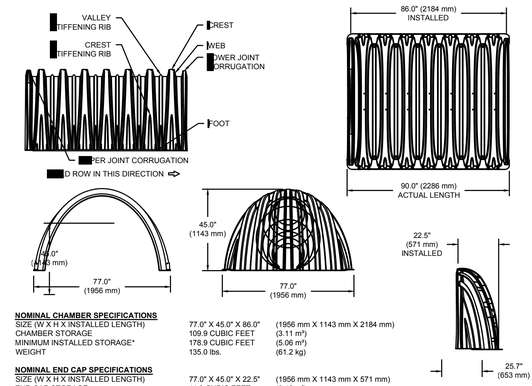

NOMINAL CHAMBER SPECIFICATIONS

SIZE (W X H X INSTALLED LENGTH)	77.0" X 45.0" X 86.0"	(1956 mm X 1143 mm X 2184 mm)
CHAMBER STORAGE	109.9 CUBIC FEET	(3.11 m³)
MINIMUM INSTALLED STORAGE*	178.9 CUBIC FEET	(5.06 m³)
WEIGHT	135.0 lbs.	(61.2 kg)

NOMINAL END CAP SPECIFICATIONS

SIZE (W X H X INSTALLED LENGTH)	77.0" X 45.0" X 22.5"	(1956 mm X 1143 mm X 571 mm)
END CAP STORAGE	14.9 CUBIC FEET	(0.42 m³)
MINIMUM INSTALLED STORAGE*	46.0 CUBIC FEET	(1.30 m³)
WEIGHT	50.0 lbs.	(22.7 kg)

*ASSUMES 12" (305 mm) STONE ABOVE, 9" (229 mm) STONE FOUNDATION AND BETWEEN CHAMBERS, 12" (305 mm) STONE PERIMETER IN FRONT OF END CAPS AND 40% STONE POROSITY

STUBS AT BOTTOM OF END CAP FOR PART NUMBERS ENDING WITH "B"
STUBS AT TOP OF END CAP FOR PART NUMBERS ENDING WITH "T"

PART #	STUB	B	C
MC3500IEPP06T	6" (150 mm)	33.21" (844 mm)	---
MC3500IEPP06B		---	0.66" (17 mm)
MC3500IEPP08T	8" (200 mm)	31.16" (791 mm)	---
MC3500IEPP08B		---	0.81" (21 mm)
MC3500IEPP10T	10" (250 mm)	29.04" (738 mm)	---
MC3500IEPP10B		---	0.93" (24 mm)
MC3500IEPP12T	12" (300 mm)	26.36" (670 mm)	---
MC3500IEPP12B		---	1.35" (34 mm)
MC3500IEPP15T	15" (375 mm)	23.39" (594 mm)	---
MC3500IEPP15B		---	1.50" (38 mm)
MC3500IEPP18TC	18" (450 mm)	20.03" (509 mm)	---
MC3500IEPP18BC		---	1.77" (45 mm)
MC3500IEPP24TC	24" (600 mm)	14.48" (368 mm)	---
MC3500IEPP24BC		---	2.06" (52 mm)
MC3500IEPP30BC	30" (750 mm)	---	

NOTE: ALL DIMENSIONS ARE NOMINAL

CUSTOM PRECORED INVERTS ARE AVAILABLE UPON REQUEST. INVENTORIED MANIFOLDS INCLUDE 12-24" (300-600 mm) SIZE ON SIZE AND 15-48" (375-1200 mm) ECCENTRIC MANIFOLDS.
CUSTOM INVERT LOCATIONS ON THE MC-3500 END CAP CUT IN THE FIELD ARE NOT RECOMMENDED FOR PIPE SIZES GREATER THAN 10" (250 mm).
THE INVERT LOCATION IN COLUMN 'B' ARE THE HIGHTEST POSSIBLE FOR THE PIPE SIZE.

MC-3500 TECHNICAL SPECIFICATION

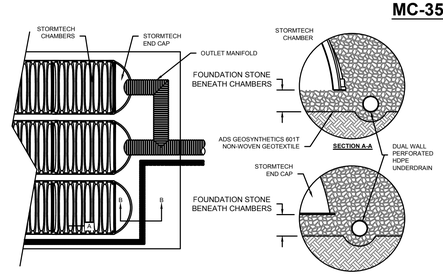

UNDERDRAIN DETAIL

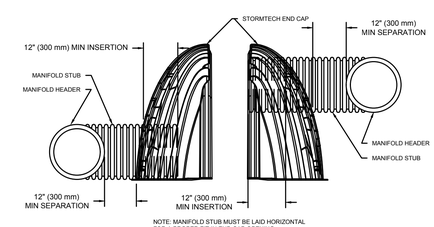

NOTE: MANIFOLD STUB MUST BE LAID HORIZONTAL FOR A PROPER FIT IN END CAP OPENING.

MC-SERIES END CAP INSERTION DETAIL

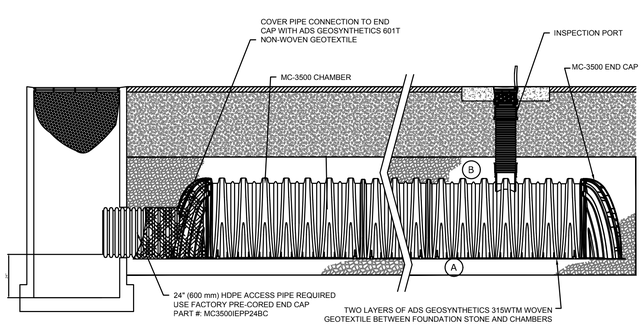

MC-3500 ISOLATOR ROW DETAIL

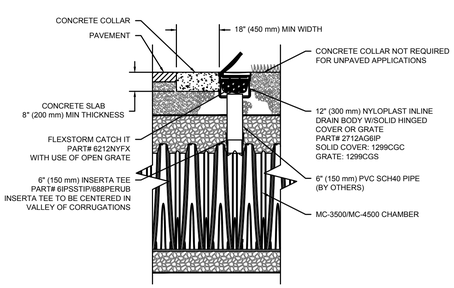

6" INSPECTION PORT DETAIL

Tecton ARCHITECTS

SLR
99 REALTY DRIVE
CHESHIRE, CT 06410
203.271.1773
SLRCONSULTING.COM

Client/ Contractor

TOWN OF SIMSBURY

933 HOPMEADOW STREET
SIMSBURY, CT 06070

Project

LATIMER LANE SCHOOL RENOVATION

33 MOUNTAIN VIEW DRIVE
WEATOGUE, CT 06089

PROJECT NORTH

Seals

INLAND WETLANDS SUBMISSION

STATE OF CONNECTICUT · THOMAS J. DALY · 31959 · LICENSED PROFESSIONAL ENGINEER

Issues / Revisions

No.	Date	Description
	01/13/2022	Inland Wetlands Submission

Drawing Title

Civil Details

Designed by:	AWG	Project No: 128-0111 RNV
Drawn by:	RH	Scale: As Noted
Checked by:	TD	

Drawing Number

C-203

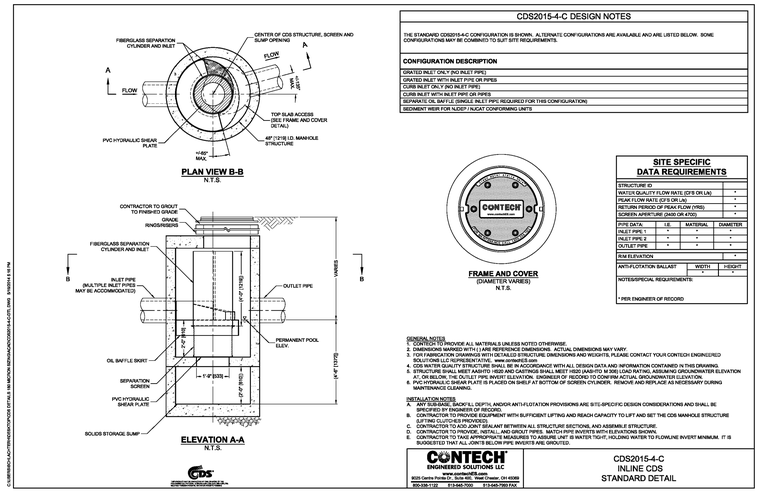

CONTECH CDS 2015-4-C STANDARD DETAIL

NOT TO SCALE

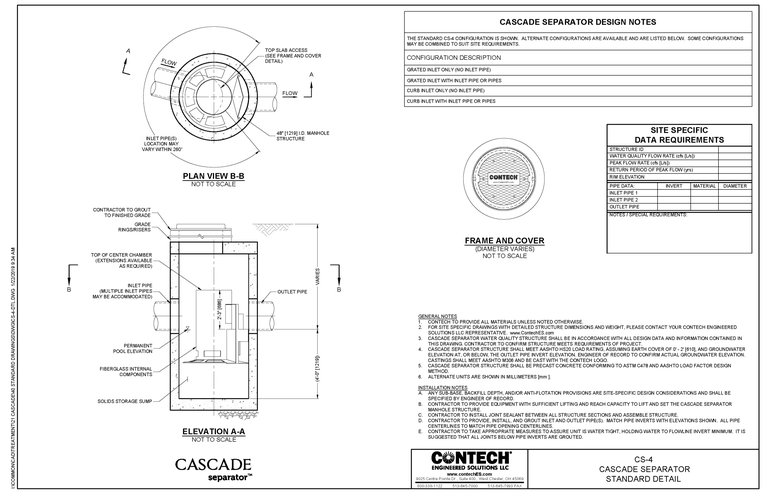

CONTECH CS-4 CASCADE SEPARATOR STANDARD DETAIL

NOT TO SCALE

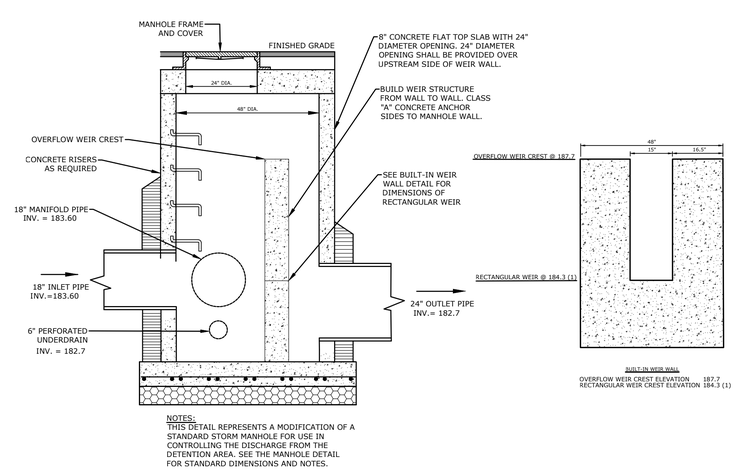

OUTLET CONTROL STRUCTURE FOR UNDERGROUND DETENTION SYSTEM 110

NOT TO SCALE

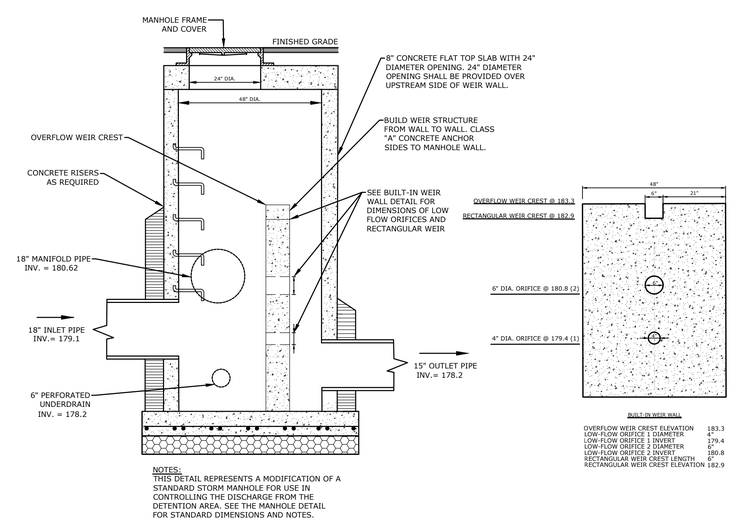

OUTLET CONTROL STRUCTURE FOR UNDERGROUND DETENTION SYSTEM 210

NOT TO SCALE

Tecton ARCHITECTS

SLR
99 REALTY DRIVE
CHESHIRE, CT 06410
203.271.1773
SLRCONSULTING.COM

Client/ Contractor

TOWN OF SIMSBURY

933 HOPMEADOW STREET
SIMSBURY, CT 06070

Project

LATIMER LANE SCHOOL RENOVATION

33 MOUNTAIN VIEW DRIVE
WEATOGUE, CT 06089

PROJECT NORTH

Seals

INLAND WETLANDS SUBMISSION

Issues / Revisions

No.	Date	Description
	01/13/2022	Inland Wetlands Submission

Drawing Title

Civil Details

Designed by:	AWG	Project No: 128-0111 RNV
Drawn by:	RH	Scale: **As Noted**
Checked by:	TD	

Drawing Number

C-204